SAMSON PUMPS

SAMSON PUMPS **INSTRUCTIONS**

Truck Master Series

INSTALLATION
OPERATION
MAINTENANCE

Non Ex

Zone 1 Internal / 1 External

Zone 0 Internal / 1 External

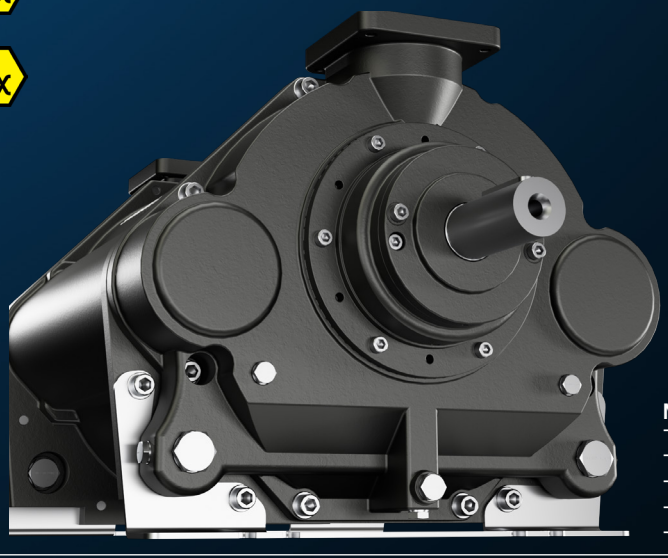

MODELS:
Truck Master 2
Truck Master 3
Truck Master 4
Truck Master 5
Truck Master 6

DOC9109N

Table of content

Page	Chapter	
3	**1**	**Introduction**
3	1.1	Declaration of Conformity
4	1.2	Declaration of Conformity Ex Zone 1/1
5	1.3	Declaration of Conformity Ex Zone 0/1
6	1.4	Explanation of warning symbols
6	1.5	Field of application
6	1.6	Disposal
7	1.7	ATEX Directive 2014/34/EU 2014/34/EU
8	**2**	**Technical data**
8	2.1	Specifications metric
9	2.2	Specifications U.S. Imperial
10	2.4	Dimensions - Pump
11	2.5	Dimensions with accessories
12	2.6	Connections
13	2.7	Function of connections
16	2.8	Performance
17	2.9	Handling and transport
17	2.10	Draining before storage
18	**3**	**Design of a system**
18	3.1	Standard system
19	3.2	Additional cooling by a tube heat exchanger
20	3.3	Additional cooling by a fan cooler
21	3.4	System layout and how to build an ATEX Zone 1/1 system
22	3.5	System layout and how to build an ATEX Zone 0/1 system
23	3.6	Safety system
24	3.7	Water separator and water tank
25	3.8	Water tank placement
25	3.9	Water consumption - Metric
26	3.10	Water consumption - U.S. Imperial
26	3.11	Water evaporation
26	3.12	Water requirement
26	3.13	Draning in general
27	3.14	Draning for winterzation
27	3.15	Draning ATEX pumps - Important actions
27	3.16	Drain procedures for water-tank
27	3.17	Primary shut off valve
28	3.18	Non-return valve
28	3.19	Rotating or warm parts must be covered
28	3.20	Pipe system dimensioning
28	3.21	Cavitation mitigation - Vacuum control valve
29	3.22	Adjustment - Vacuum control valve
29	3.23	Suction filter
29	**4**	**Installation and start-up**
29	4.1	Securing the pump
29	4.2	Priming of the pump
30	4.3	Connection to the vehicle
30	4.4	Transmission
31	4.5	Earth connection requirements
31	4.6	Direction of rotation
31	4.7	Prior to start-up
32	4.8	Installation of tube heat exchanger
33	4.9	Water pump
34	**5**	**Service operation and maintenance and inspection intervals**
34	5.1	Inspection and lubrication of bearings
35	5.2	Visually Inspecting for leakage
35	5.3	Check grease cartridges (Category 2 pumps with grease cartridges)
35	5.4	Inspection of ATEX safety device
35	5.5	Inspection and cleaning of water supply pipe
35	5.6	Calibration of ATEX safety device
36	5.7	Overhaul of pump
36	5.8	Inspection and cleaning of internal channels
36	5.9	Inspection of coupling
37	5.10	Winterization
38	5.11	Inspection of hoses on water pump
39	**6**	**Troubleshooting**
40	**7**	**Spare parts and tools**
40	7.1	Spare parts
40	7.2	Marking and identification

1 Introduction

1.1 Declaration of Conformity

SAMSON PUMPS
Switch on the future

Declaration of Conformity
Annex IIA

Samson Pumps A/S
Petersmindevej 21
DK-8800 Viborg

Hereby declares that the following products:

Liquid ring pump
TM6, TM5, TM4, TM3, TM2, TM3400, TM2500, TM1700, TM1600, TM600, TM350, SLP2100, SLP2700, SLP3100, WRP2500, WRP3100

Conforms to the directive:

Machinery Directive 2006/42/EC

I hereby declare that the liquid ring pumps are in conformity with the following harmonized standards:

DS/EN ISO 12100:2011	Safety of machinery - General principles for design - Risk assessment and risk reduction
DS/EN 1012-2 + A1:2009	Compressors and Pumps - Safety requirements - Part 2: Vacuum pumps

The standards above only apply to the extent that it is relevant for the purpose of the product.
The product must not be used before the complete system, which it must be incorporated in, has been conformity assessed and found to comply with all relevant health and safety requirements of 2006/42/EC and other relevant directives. The product must be included in the overall risk assessment.

Viborg, 20.02.2026

Jan S. Christiansen – Manager, Technical dept.

ISO 9001 Certified ExVeritas®

Samson Pumps A/S | www.samson-pumps.com | CVR.DK-27913695

DOC4044G

1.2 Declaration of Conformity Ex Zone 1/1

SAMSON PUMPS
Switch on the future

Declaration of Conformity

Annex IIA

Samson Pumps A/S
Petersmindevej 21
DK-8800 Viborg

Hereby declares that the following products:

Liquid ring pumps
TM-6*X1, TM-6***1X1, TM-5***X1, TM-5***1X1, TM-4***X1, TM-4***1X1, TM-3***X1, TM-3***1X1, TM-2***X1, TM-2***1X1, TM6, TM5, TM4, TM3, TM2, TM3400, TM2500, TM1700, TM1600, TM600, TM350, SLP2100***X1, SLP2100***1X1, SLP2700***X1, SLP2700***1X1, SLP3100***X1, SLP3100***1X1, WRP2500***X1, WRP2500***1X1, WRP3100***X1, WRP3100***1X1, OM1000, OM700, OM500, OM450, OM250**

Conforms to the following directives:

Machinery Directive 2006/42/EC
ATEX Directive 2014/34/EU

Explosion protection as follows on nameplate:

Ex II 2G Ex h IIC T4 Gb Internal
Ex II 2G Ex h IIC T4 Gb External

I hereby declare, that the machine are in conformity with the following harmonized standards:

DS/EN ISO 12100:2011	Safety of machinery - General principles for design - Risk assessment and risk reduction
DS/EN 1012-2 + A1:2009	Compressors and Pumps - Safety requirements - Part 2: Vacuum pumps
DS/EN 1127-1:2019	Explosive atmospheres - Explosion prevention and protection - part 1: Basic concepts and methodology
DS/EN ISO 80079-36:2016	Explosive atmospheres - Part 36: Non-electrical equipment for explosive atmospheres - Basic method and requirements
DS/EN ISO 80079-37:2016	Explosive atmospheres - Part 37: Non-electrical equipment for explosive atmospheres - Non-electrical type of protection constructional safety "c", control of ignition sources "b", liquid immersion "k"

The standard above only applies to the extent that it is relevant for the purpose of the pump.
The product must not be used before the complete system, which it must be incorporated in, has been conformity assessed and found to comply with all relevant health and safety requirements of 2006/42/EC and other relevant directives. The product must be included in the overall risk assessment.

ATEX Conformity Certificate Number ExVeritas 19 ATEX 0582

Viborg, 09.09.2026

Jan S. Christiansen – Manager, Technical dept.

ISO 9001 Certified ExVeritas®

Samson Pumps A/S | www.samson-pumps.com | CVR.DK-27913695

DOC4047L

1.3 Declaration of Conformity Ex Zone 0/1

SAMSON PUMPS
Switch on the future

Declaration of Conformity

Annex IIA

Samson Pumps A/S
Petersmindevej 21
DK-8800 Viborg

Hereby declares that the following products:

Liquid ring pumps
TM6, TM5, TM4, TM3400, TM2500, TM1700, TM1600, TM600, TM350, SLP2100, SLP2700, SLP3100

Conforms to the following directives:

Machinery Directive 2006/42/EC
ATEX Directive 2014/34/EU

Explosion protection as follows on nameplate:

Ex II 1G Ex h IIC T4 Ga Internal
Ex II 2G Ex h IIC T4 Gb External

I hereby declare, that the machine are in conformity with the following harmonized standards:

DS/EN ISO 12100:2011	Safety of machinery - General principles for design - Risk assessment and risk reduction
DS/EN 1012-2 + A1:2009	Compressors and Pumps - Safety requirements - Part 2: Vacuum pumps
DS/EN 1127-1:2019	Explosive atmospheres - Explosion prevention and protection - part 1: Basic concepts and methodology
DS/EN ISO 80079-36:2016	Explosive atmospheres - Part 36: Non-electrical equipment for explosive atmospheres - Basic method and requirements
DS/EN ISO 80079-37:2016	Explosive atmospheres - Part 37: Non-electrical equipment for explosive atmospheres - Non-electrical type of protection constructional safety "c", control of ignition sources "b", liquid immersion "k"

The standard above only applies to the extent that it is relevant for the purpose of the pump.
The product must not be used before the complete system, which it must be incorporated in, has been conformity assessed and found to comply with all relevant health and safety requirements of 2006/42/EC and other relevant directives. The product must be included in the overall risk assessment.

EU TYPE-Examination Certificate Number ExVeritas 19 ATEX 0452X
Certification body Identification Number 2804

Viborg, 07.12.2020

Jan S. Christiansen – Manager, Technical dept.

ISO 9001 Certified
ExVeritas®

Samson Pumps A/S | www.samson-pumps.com | CVR.DK-27913695

DOC4046E

1.4 Explanation of warning symbols

Important technical and safety instructions are shown by symbols. If the instructions are not performed correctly, it can lead to personnel injuries or incorrect function of the pump.

To be used with all safety instructions that must be followed. A failure to follow the instructions may result in injuries and/or incorrect machine operation

This symbol stands for safety instructions which – if they are not observed – may lead to a risk of explosion. You must therefore always follow these instructions

This symbol precedes information that refers to pumps used in a potentially explosive atmosphere and instructions related to Ex

1.5 Field of application

- Inlet of foreign objects can damage the pump

- The pump is designed exclusively to pump gases, including atmospheric air

- WARNING!
Avoid cavitation of the pump! For further information, see instruction manual for the Samson Pumps vacuum control valve (optional)

It must be ensured that the inlet gas cannot react with the water and create aggressive bonds that break down the pump's components.
For other operating data, see specifications.
The pump can only be used with media that is not aggressive to the pump's materials.

The pump may only be used with media that are not aggressive to the pump's materials. See section "Technical data" for pump materials specifications.

When using ATEX-approved pumps, refer to the marking on the pump and the areas of application
specified in the ATEX Directive.

1.6 Disposal

Samson's liquid ring pumps are manufactured so that most parts of the unit can be reused or recycled.

Samson Pumps offers all users the option of returning used products for refurbishment or scrapping.

Alternatively, the customer may disassemble the pump and sort the individual components.

See the section "Technical Data" for detailed pump material specifications.

All components must be disposed of in accordance with national regulations.

1.7 ATEX Directive 2014/34/EU 2014/34/EU

Zone 1
This chapter relate to Ex Zone 1/1 approved pumps (ATEX category 2 pumps)

Zone 1 (for ATEX category 2 pumps)

The pump may be incorporated into a larger system, if the internal atmosphere has an area classification of:
Zone 1 (for ATEX category 2 pumps)
These systems will be certified in accordance with the ATEX Directive 2014/34/EU.
For the certification to be valid, the pump must be installed as described in this manual.

II 2G Ex h IIC T4 Gb Internal
II 2G Ex h IIC T4 Gb External

ExVeritas 19 ATEX 0582

Explanation of symbols and characters used in ATEX marking:

	The European Commission's mark for Ex products
II	Equipment group II (non-mining)
2	Equipment category
G	Type of explosive atmosphere (G = Gas)
Ex	Indication of equipment for use in potentially explosive atmospheres
h	Explosion protection
IIC	Gas group (explosion group)
T4	Temperature class (T4 = 135 °C / 275 °F)
Gb	Equipment protection level

Zone 0
This chapter relate to Ex Zone 0/1 approved pumps (ATEX category 1 pumps)

Zone 0 (for ATEX category 1 pumps)

The pump may be incorporated into a larger system, if the internal atmosphere has an area classification of:
Zone 0 (for ATEX category 1 pumps)
These systems will be certified in accordance with the ATEX Directive 2014/34/EU
For the certification to be valid, the pump must be installed as described in this manual.

II 1G Ex h IIC T4 Ga Internal
II 2G Ex h IIC T4 Gb External

ExVeritas 19 ATEX 0452X

Explanation of symbols and characters used in ATEX marking:

	The European Commission's mark for Ex products
II	Equipment group II (non-mining)
1	Equipment category
G	Type of explosive atmosphere (G = Gas)
Ex	Indication of equipment for use in potentially explosive atmospheres
h	Explosion protection
IIC	Gas group (explosion group)
T4	Temperature class (T4 = 135 °C / 275 °F)
Ga	Equipment protection level

ExVeritas 19 ATEX 0452X is the certificate number.

Special Conditions for Safe Use:

For pumps classified Ga (Zone 0), temperature monitoring is required on the bearings to initiate a shutdown of the equipment in case bearings exceed the temperature, listed under Section "System layout (Zone 0/1) in the Instruction Manual.

The temperature sensors must be connected to a monitoring and shutdown system which is sufficiently reliable and compliant with the requirements for ATEX safety related devices and systems as defined in Annex II, clause 1.5.1 of Directive 2014/34/EU (i.e. b1 (SIL1) as defined by EN ISO 80079-37 cl. 6.5).

Refer to manufacturer's Instruction Manual for correct installation and maintenance.

2 Technical data

2.1 Specifications metric

A failure to meet these specifications may result in damage to the pump

A failure to meet these specifications may result in damage to the pump and a potential risk of explosion

General specifications		Type	Truck Master 2	Truck Master 3	Truck Master 4	Truck Master 5	Truck Master 6
Ambient temperature, operation MAX		-	55°C	55°C	55°C	55°C	55°C
Ambient temperature, storage MIN		-	-20°C	-20°C	-20°C	-20°C	-20°C
Humidity		-	100%	100%	100%	100%	100%
Intake temperature air, suction side MAX		Standard	NA	NA	NA	NA	NA
		1/1 Ex	80°C	80°C	80°C	80°C	80°C
		0/1 Ex	NA	NA	80°C	80°C	80°C
Intake temperature water, MAX (Liquid ring pump / water pump)		Standard	NA	NA	NA	NA	NA
		1/1 Ex	60°C	60°C	60°C	60°C	60°C
		0/1 Ex	NA	NA	60°C	60°C	60°C
Noise level @ 7m		-	63 db(A)	63 db(A)	63 db(A)	63 db(A)	63 db(A)
Noise level @ 1m		-	80 db(A)	80 db(A)	80 db(A)	80 db(A)	80 db(A)
Weight		-	68 kg	98 kg	245 kg	321 kg	531 kg
Water volume		-	13 L	32 L	49 L	84 L	104 L
Water pipe connection, dimension		-	G 1/2”	G 1/2”	G 3/4”	G 3/4”	G 1”
Water pipe connection max length		-	6m	6m	6m	6m	6m
MAX radial load on drive shaft		-	1400 N	2000 N	9000 N	7500 N	14000 N
Revolutions MAX		-	1800 RPM	1800 RPM	1800 RPM	1500 RPM	1400 RPM
Revolutions MIN		-	1100 RPM	1000 RPM	900 RPM	800 RPM	700 RPM
Pressure MAX		Standard	1 bar(g)	1 bar(g)	1 bar(g)	1 bar(g)	1 bar(g)
		1/1 Ex	1 bar(g)	1 bar(g)	1 bar(g)	1 bar(g)	0.75 bar(g)
		0/1 Ex	NA	NA	1 bar(g)	1 bar(g)	0.75 bar(g)
Pressure MIN		-	100 mbar abs.	100 mbar abs.	150 mbar abs.	150 mbar abs.	150 mbar abs.
Test pressure		-			12 bar(g)	12 bar(g)	12 bar(g)
Lubricating of bearings		Standard	Lifetime	Lifetime	Man/auto	Man/auto	Man/auto
		1/1 Ex	Lifetime	Lifetime	Man/auto	Man/auto	Man/auto
		0/1 Ex	Not avalible	Not avalible	Auto *	Auto *	Auto *
Grease type		Manual	NA	NA	SKF LGHQ2	SKF LGHQ2	SKF LGHQ2
		Automatic	NA	NA	SKF LAGD 125/HQ2	SKF LAGD 125/HQ2	SKF LAGD 125/ HQ2
Casted parts		-	Aluminium	Aluminium	Cast iron	Cast iron	Cast iron
Rotor shaft		All	Stainless steel	Stainless steel	Stainless steel	Stainless steel	Stainless steel
Rotor		All	Aluminium	Aluminium	Stainless steel	Stainless steel	Stainless steel
Surface treatment		All	Hard anodized	Hard anodized	E-coat	E-coat	E-coat
Water flow (2 mH_2O)	Revolutions MAX	-	130 l/h	130 l/h	130 l/h	110 l/h	100 l/h
	Revolutions MIN	-	80 l/h	70 l/h	65 l/h	50 l/h	40 l/h

2.2 Specifications U.S. Imperial

A failure to meet these specifications may result in damage to the pump

A failure to meet these specifications may result in damage to the pump and a potential risk of explosion

General specifications		Type	Truck Master 2	Truck Master 3	Truck Master 4	Truck Master 5	Truck Master 6
Ambient temperature, operation MAX		-	131°F	131°F	131°F	131°F	131°F
Ambient temperature, storage MIN		-	-4°F	-4°F	-4°F	-4°F	-4°F
Humidity		-	100%	100%	100%	100%	100%
Intake temperature air, suction side MAX		Standard	NA	NA	NA	NA	NA
		1/1 Ex	176°F	176°F	176°F	176°F	176°F
		0/1 Ex	176°F	176°F	176°F	176°F	176°F
Intake temperature water, MAX (Liquid ring pump / water pump)		Standard	NA	NA	NA	NA	NA
		1/1 Ex	140°F	140°F	140°F	140°F	140°F
		0/1 Ex	140°F	140°F	140°F	140°F	140°F
Noise level @ 23 ft		-	63 db(A)	63 db(A)	63 db(A)	63 db(A)	63 db(A)
Noise level @ 3.3 ft		-	80 db(A)	80 db(A)	80 db(A)	80 db(A)	80 db(A)
Weight		-	150 lb	216 lb	540 lb	708 lb	1171 lb
Water volume		-	3.4 US gal	8.5 US gal	12.9 US gal	22.2 US gal	27.5 gal
Water pipe connection, dimension		-	G 1/2”	G 1/2”	G 3/4”	G 3/4”	G 1”
Water pipe connection max length		-	20 ft	20 ft	20 ft	20 ft	20 ft
MAX radial load on drive shaft		-	314.7 lbf	449.6 lbf	2023.2 lbf	1686.1 lbf	3147.3 lbf
Revolutions MAX		-	1800 RPM	1800 RPM	1800 RPM	1500 RPM	1400 RPM
Revolutions MIN		-	1100 RPM	1000 RPM	900 RPM	800 RPM	700 RPM
Pressure MAX		Standard	14.5 PSI	14.5 PSI	14.5 PSI	14.5 PSI	14.5 PSI
		1/1 Ex	14.5 PSI	14.5 PSI	14.5 PSI	14.5 PSI	10.9 PSI
		0/1 Ex	NA	NA	14.5 PSI	14.5 PSI	10.9 PSI
Pressure MIN		-	27 inHg	27 inHg	25.5 inHg	25.5 inHg	25.5 inHg
Test pressure		-			174 PSI	174 PSI	174 PSI
Lubricating of bearings		Standard	Lifetime	Lifetime	Man/auto	Man/auto	Man/auto
		1/1 Ex	Lifetime	Lifetime	Man/auto	Man/auto	Man/auto
		0/1 Ex	Not avalible	Not avalible	Auto *	Auto *	Auto *
Grease type		Manual	NA	NA	SKF LGHQ2	SKF LGHQ2	SKF LGHQ2
		Automatic	NA	NA	SKF LAGD 125/HQ2	SKF LAGD 125/HQ2	SKF LAGD 125/HQ2
Casted parts		-	Aluminium	Aluminium	Cast iron	Cast iron	Cast iron
Rotor shaft		All	Stainless steel	Stainless steel	Stainless steel	Stainless steel	Stainless steel
Rotor		All	Aluminium	Aluminium	Stainless steel	Stainless steel	Stainless steel
Surface treatment		All	Hard anodized	Hard anodized	E-coat	E-coat	E-coat
Water flow (2 mH_2O)	Revolutions MAX	-	34.3 gal/h	34.3 gal/h	34.3 gal/h	29.1 gal/h	26.4 gal/h
	Revolutions MIN	-	21.1 gal/h	18.5 gal/h	17.2 gal/h	13.2 gal/h	10.6 gal/h

2.4 Dimensions - Pump

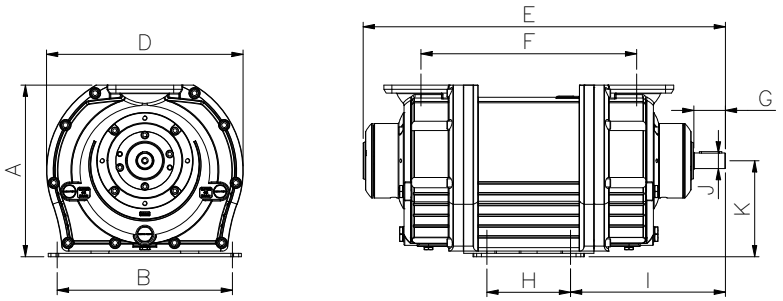

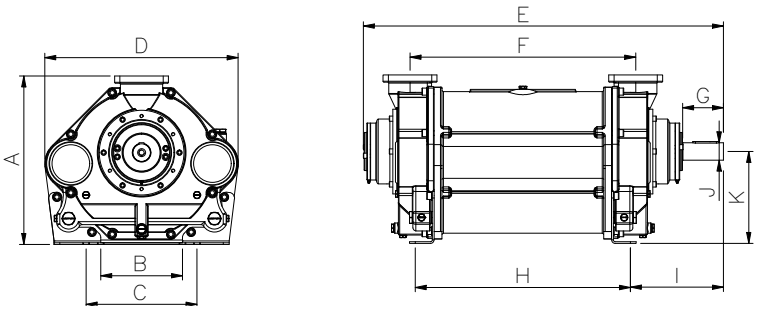

Metric [mm]	A	B	C	D	E	F	G	H	I	J	K
Truck Master 2	348	342		382	644	335	70	102	306	Ø30	194
Truck Master 3	383	390		438	807	480	70	186	345	Ø35	214
Truck Master 4	446	250	350	502	928	567	75	466	268	Ø45	240
Truck Master 5	498	300	400	579	1074	648	100	549	312	Ø48	270
Truck Master 6	578	280	380	663	1234	773	140	737	319	Ø60	315

Imperial [in]	A	B	C	D	E	F	G	H	I	J	K
Truck Master 2	13.7	13.5		15	25.4	13.2	2.8	4	12	1.2	7.6
Truck Master 3	15.1	15.4		17.2	31.8	18.9	2.8	7.3	13.6	1.4	8.4
Truck Master 4	17.6	9.8	13.8	19.8	36.5	22.3	2.9	18.3	10.6	1.8	9.4
Truck Master 5	19.6	11.8	15.7	22.8	42.3	25.5	3.9	21.6	12.3	1.9	10.6
Truck Master 6	22.8	11	14.9	26.1	48.6	30.4	5.5	29	12.6	2.4	12.4

2.5 Dimensions with accessories

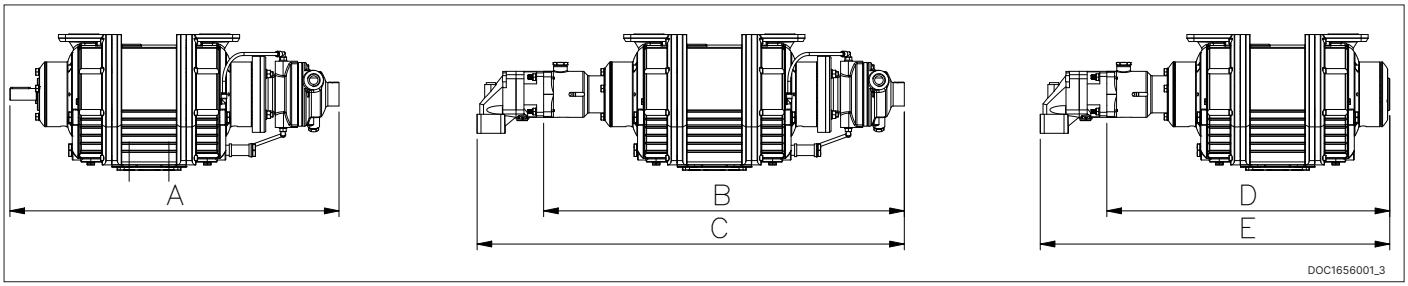

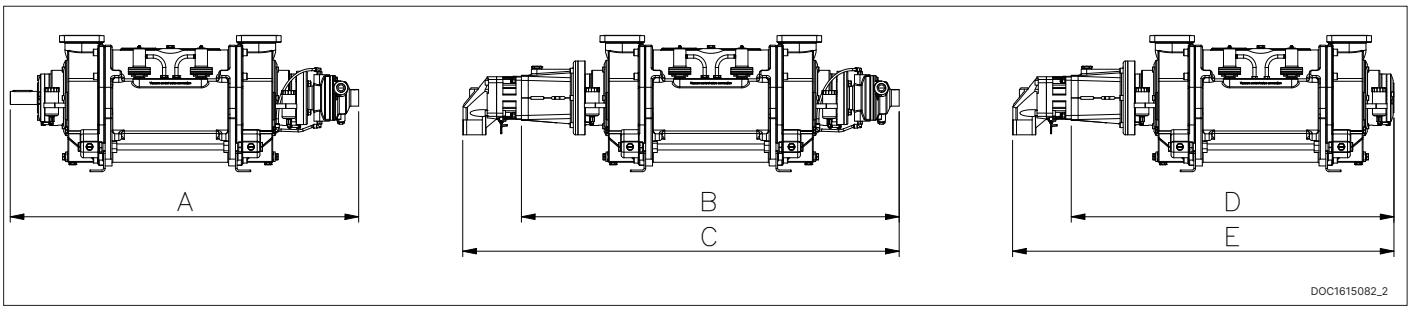

Metric [mm]		A	B	C	D	E
Truck Master 2	ISO 30	845	926	1096	726	897
Truck Master 3	ISO 30	1006	1094	1265	895	1066
	ISO 60	1006	1115	1304	916	1104
Truck Master 4	ISO 60	1128	1230	1419	1030	1219
	ISO 90	1128	1053	1475	1060	1275
Truck Master 5	ISO 90	1276	1383	1598	1181	1396
	ISO 162	1276	1449	1727	1248	1526
Truck Master 6	ISO 163	1437	1572	1850	1365	1643

Imperial [in]		A	B	C	D	E
Truck Master 2	ISO 30	33.3	36.5	43.2	28.6	35.3
Truck Master 3	ISO 30	39.6	43.1	49.8	35.2	42
	ISO 60	39.6	43.9	51.3	36.1	43.5
Truck Master 4	ISO 60	44.4	48.4	55.9	40.6	48
	ISO 90	44.4	41.5	58.1	41.7	50.2
Truck Master 5	ISO 90	50.2	54.5	62.9	46.5	55
	ISO 162	50.2	57.1	68	49.1	60.1
Truck Master 6	ISO 163	56.6	61.9	72.8	53.7	64.7

2.6 Connections

Truck Master 2 - 3

Front DE

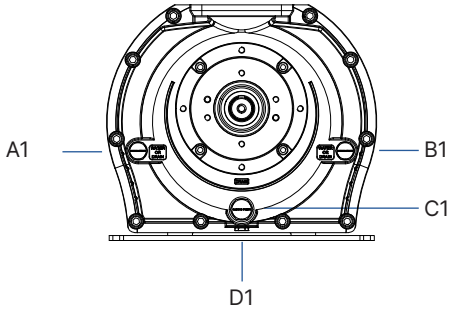

DOC1657001_7

Back NDE

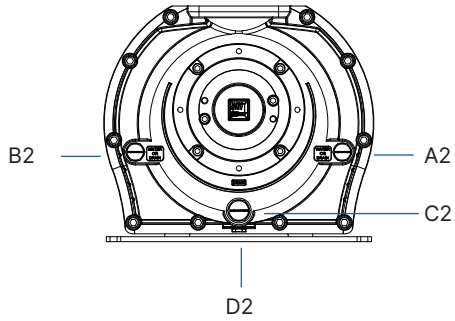

DOC1657001_7

Connection ID & size	Truck Master 2	Truck Master 3
A1	G1/2”	G1/2”
A2	G1/2”	G1/2”
B1	G1/2”	G1/2”
B2	G1/2”	G1/2”
C1	G3/4”	G3/4”
C2	G3/4”	G3/4”
D1	G1/4”	G1/4”
D2	G1/4”	G1/4”

Truck Master 4 - 5 - 6

Front DE

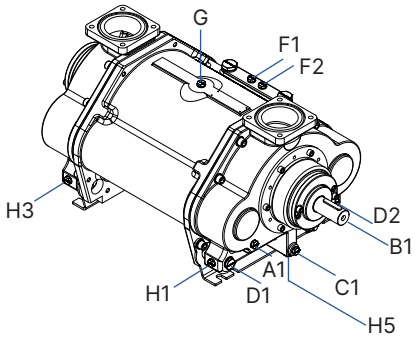

DOC1627498_1B

Back NDE

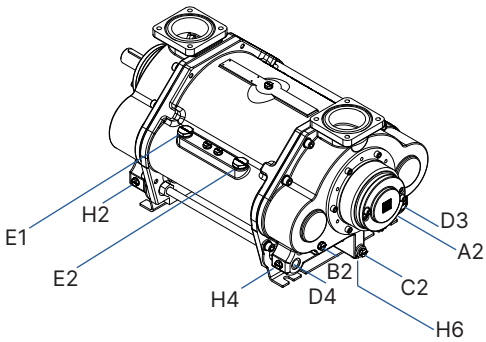

DOC1627498_1B

Connection ID & size	Truck Master 4	Truck Master 5	Truck Master 6
A1, A2	G3/8”	G3/8”	G3/8”
B1, B2	G3/8”	G3/8”	G3/8”
C1, C2	G1/2”	G1/2”	G1/2”
D1, D2, D3, D4	G3/4”	G3/4”	G1”
E1, E2	G1”	G1”	G1”
F1, F2	G3/8”	G3/8”	G3/8”
G	G3/8”	G3/8”	G3/8”
H1, H2, H3, H4, H5, H6	G3/8”	G3/8”	G3/8”

2.7 Function of connections

Truck Master 2 - 3

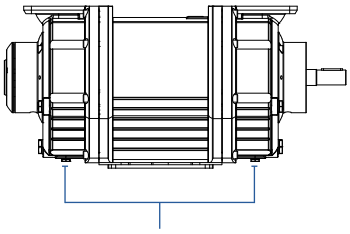

D1, D2
No function
Winterization NA

C1
Main drain
Winterization Necessary to drain for winterization in cases where this plug is located lowest.

B1, B2
Water supply if desired.
Winterization Its necessary to drain one of the A or B connections for winterization. If the pump is angled, drain from the lowest located connection.

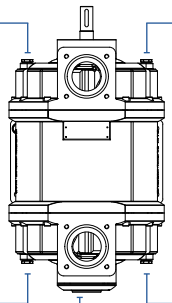

A1, A2
Water supply if desired.
Winterization Its necessary to drain one of the A or B connections for winterization. If the pump is angled, drain from the lowest located connection.

C1
Main drain
Winterization Necessary to drain for winterization in cases where this plug is located lowest.

DOC1657001_7

Flanges connections

Model	A	B	C
Truck Master 2	M10	Ø110 mm / 4.3 in	Ø55 mm / 2.2 in
Truck Master 3	M12	Ø160 mm / 6.3 in	Ø83 mm / 3.3 in

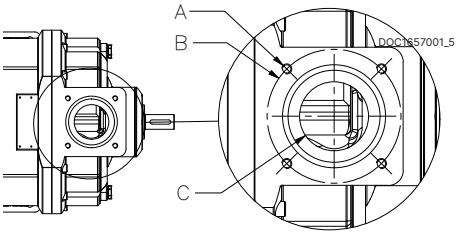

Truck Master 4 - 5 - 6

D2 & D4	
CW	CCW
Suction	Pressure
Water supply if desired.	
Winterization It's necessary to drain one of the D connections for winterization. If the pump is angled, drain from the lowest located D connection.	

C1
Connected to the pump casing and can be used to drain out water from the pump. If the pump is placed horizontal use either C1 or C2. If the pump is angled use the lowest plug.
Winterization Necessary to drain for winterization in cases where this plug is located lowest.

D1 & D3	
CW	CCW
Pressure	Suction
Water supply if desired.	
Winterization It's necessary to drain one of the D connections for winterization. If the pump is angled, drain from the lowest located D connection.	

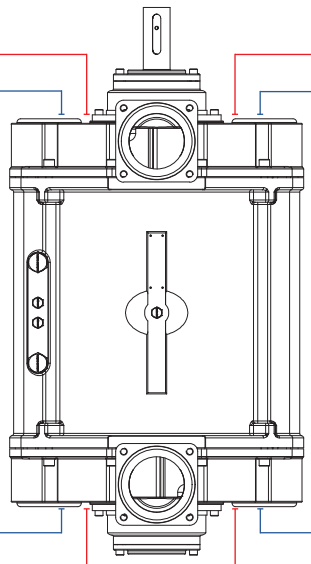

B1 & B2	
CW	CCW
Suction	Pressure
Can be used for measuring the vacuum. Suction of condensate. Sucking up glycol for winterization.	Can be connected to the water separator winterization drain.
Winterization Not necessary to drain for winterization. This chamber will contain very little water.	

C2
Connected to the pump casing and can be used to drain out water from the pump. If the pump is placed horizontal use either C1 or C2. If the pump is angled use the lowest plug.
Winterization Necessary to drain for winterization in cases where this plug is located lowest.

A1 & A2	
CW	CCW
Pressure	Suction
Can be connected to the water separator winterization drain.	Can be used for measuring the vacuum. Suction of condensate. Sucking up glycol for winterization.
Winterization Not necessary to drain for winterization. This chamber will contain very little water.	

DOC1627468_8

F	
CW	CCW
Right side, seen from shaft end	Left side seen from DE
Pilot pressure for vacuum control valve. 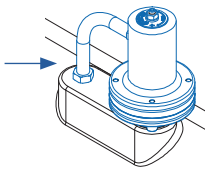	
Winterization NA	

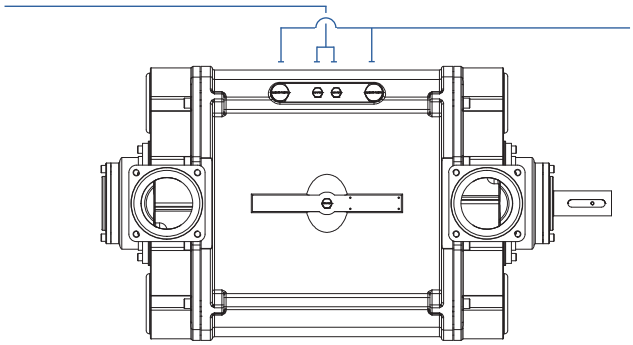

E	
CW	CCW
Right side, seen from shaft end	Left side seen from DE
Main connection for mounting vacuum control valve.	
Winterization NA	

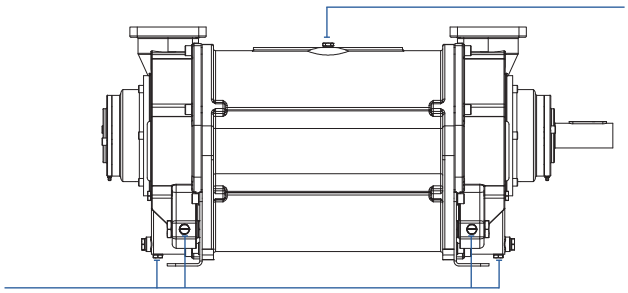

G
No function
Winterization NA

H x 6
No function
Winterization NA

DOC1627468_8

Flanges connections

Model	A	B	C	D	E
Truck Master 4	M16	Ø180 mm / 7.1 in	Ø107 mm / 4.2 in	163 mm / 6.4 in	163 mm / 6.4 in
Truck Master 5	M16	Ø180 mm / 7.1 in	Ø107 mm / 4.2 in	163 mm / 6.4 in	163 mm / 6.4 in
Truck Master 6	M16	Ø210 mm / 8.3 in	Ø125 mm / 4.9 in	185 mm / 7.3 in	185 mm / 7.3 in

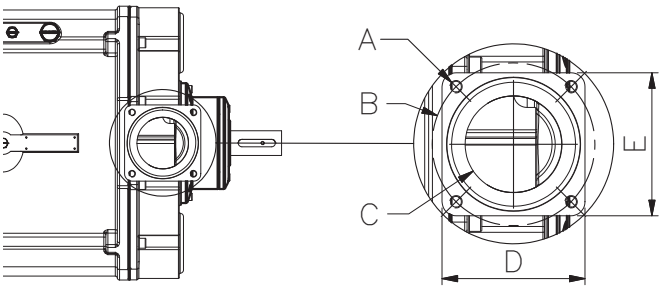

DOC1627468_7A

2.8 Performance

To achive the optimal performance and energy compsumption, we recomend that the operator is able to adjust the RPM of the pump according to below schedule based on actual suction jobs.
For more performance data please visit our Product Center at www.buy.samson-pumps.com

Truck Master 2			Vacuum-lift fluids	Air-lift fluids	Air-lift solids
	Suction hose 2"	**Recomended**	**1200 RPM**	**1200 RPM**	**1700 RPM**
	Suction hose 3"		1200 RPM	1600 RPM	1800 RPM
	Suction hose 4"		1200 RPM		
	Suction hose 5"		1200 RPM		
	Suction hose 6"		1200 RPM		

Truck Master 2 has its best performance in 2" suction hoses.

For suction hoses above 2" we recommend this pump for vacuum lifts of fluids only.

Truck Master 3			Vacuum-lift fluids	Air-lift fluids	Air-lift solids
	Suction hose 2"		1000 RPM	1000 RPM	1000 RPM
	Suction hose 3"	**Recomended**	**1000 RPM**	**1100 RPM**	**1600 RPM**
	Suction hose 4"		1000 RPM	1500 RPM	1800 RPM
	Suction hose 5"		1000 RPM		
	Suction hose 6"		1000 RPM		

Truck Master 3 has its best performance in 3" suction hoses and secondary in 2" with reduced RPMs.

For suction hoses above 3" we recommend this pump for vacuum lifts of fluids only.

Truck Master 4			Vacuum-lift fluids	Air-lift fluids	Air-lift solids
	Suction hose 2"		900 RPM	900 RPM	900 RPM
	Suction hose 3"		900 RPM	900 RPM	900 RPM
	Suction hose 4"	**Recomended**	**900 RPM**	**1500 RPM**	**1800 RPM**
	Suction hose 5"		900 RPM	1800 RPM	
	Suction hose 6"		900 RPM		

Truck Master 4 has its best performance in 4" suction hoses and secondary in 2" and 3" with reduced RPMs.

For suction hoses above 4" we recommend this pump for vacuum lifts of fluids only.

Truck Master 5			Vacuum-lift fluids	Air-lift fluids	Air-lift solids
	Suction hose 2"		800 RPM	800 RPM	800 RPM
	Suction hose 3"		800 RPM	800 RPM	800 RPM
	Suction hose 4"		800 RPM	900 RPM	1100 RPM
	Suction hose 5"	**Recomended**	**800 RPM**	**1300 RPM**	**1500 RPM**
	Suction hose 6"		800 RPM	1500 RPM	

Truck Master 5 has its best performance in 5" suction hoses and secondary in 3" and 4" with reduced RPMs.

For suction hoses above 5" we recommend this pump for vacuum lifts of fluids only.

Truck Master 6			Vacuum-lift fluids	Air-lift fluids	Air-lift solids
	Suction hose 2"		600 RPM	600 RPM	600 RPM
	Suction hose 3"		600 RPM	600 RPM	1600 RPM
	Suction hose 4"		600 RPM	600 RPM	600 RPM
	Suction hose 5"		600 RPM	600 RPM	600 RPM
	Suction hose 6"	**Recomended**	**600 RPM**	**1200 RPM**	**1400 RPM**

Truck Master 6 has its best performance in 6" suction hoses and secondary in 4" and 5" with reduced RPMs.

For suction hoses above 6" we recommend this pump for vacuum lifts of fluids only.

2.9 Handling and transport

A failure to meet these specifications may result in damage to the pump

The pump must be transported in such way that it is not exposed to vibrations and impacts that can overload the bearings.

The pump must be inspected for damages upon delivery. If the pump is damaged, it must not be used, and the damage must be reported to the manufacturer.

Ensure that the pump's identification plate is intact and that the marking of the pump corresponds to its use.
The pump must only be handled using approved lifting eyes, in accordance with nationally applicable regulations and only in a vertical motion.

Handling & transport	DOC11093A
Road	
Sea	
Air	
Crane The pump must only be lifted using approved eye bolts in accordance with nationally applicable regulations and only in a vertical motion.	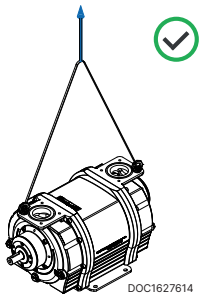 DOC1627614 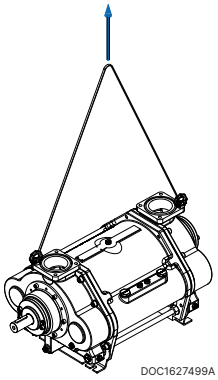 DOC1627499A

2.10 Draining before storage

A failure to comply with the requirements for storing the pump may result in internal damage to the device

If the temperature is below freezing point of the water, it could damage the pump.
Under these conditions, the pump must be drained completely

All plugs and protective covers must be fitted during storage

The pump's water is drained on delivery, and the pump can be immediately stored in accordance with the technical specifications.
After operation, the pump can be stored for 30 days without further action.
If the pump remains out of operation for a longer period of time after use, its water must be drained, and the water supply to the pump must be shut off.

Draining during normal operation, see chapter Service operation and maintenance and inspection intervals.

Drain before storage	Action
Truck Master 2	Remove one A, B and C plug.
Truck Master 3	Remove one A, B and C plug.
Truck Master 4	Remove one A, B, C and D plug.
Truck Master 5	Remove one A, B, C and D plug.
Truck Master 6	Remove one A, B, C and D plug.
Water pump	Remove plug Pos 5 in Chapter 4.9

3 Design of a system

3.1 Standard system

The illustration below shows a typical configuration of a liquid ring pump installation.
The pump must be installed together with a water tank to ensure a continuous supply of operating water during operation. When the pump is started, shut-off valve (pos. 5) must be opened, allowing the pump to automatically receive the correct amount of water.
The pump will immediately generate an airflow.

On the discharge side, the air and the supplied water will flow out.
The air will continue through the discharge pipe into the Samson 4-way valve. This valve determines whether the system is operating in suction or discharge mode. The position shown is suction mode, meaning the air continues out through the pipe system and into the Samson Drip Stop, which ensures that remaining water droplets and some condensate are collected and returned to the system.

If the operator stops the pump while the tank is under vacuum, a strong reverse airflow will occur in the system. In some cases, this may cause operating water to be drawn out of the pump; therefore, a non-return valve (pos. 8) should be installed on the pump's discharge side. Naturally, small impurities will be drawn into the pump. For this reason, a drain valve should be installed at the bottom of the water tank.

For installation, operation, and related information, please refer to the respective product manuals and other chapters in this manual.

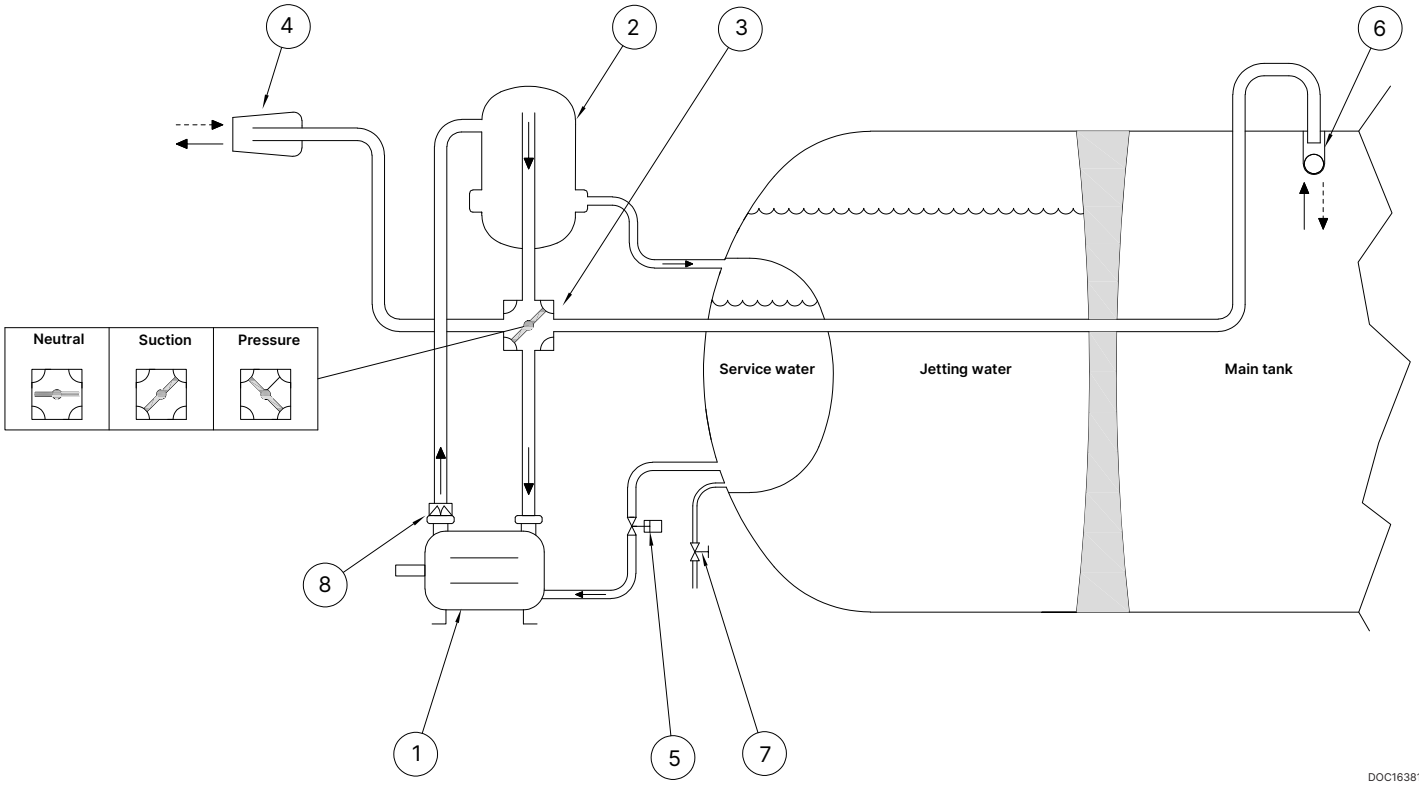

Pos	Description
1	Vacuum pump
2	Water separator
3	4way valve
4	Drip stop
5	Shut-off valve
6	Primary shut off valve
7	Drain valve
8	Non-return valve

3.2 Additional cooling by a tube heat exchanger

Why?
The operating fluid is naturally cooled through evaporation and heat radiation to the surroundings. However, in some applications this passive cooling effect is not sufficient.
Cooling with jetting water through a tube heat exchanger (pos. 15) provides a simple and effective method of achieving additional cooling while requiring only minimal installation effort.

How?
The cold jetting water is used to cool the operating water via the tube heat exchanger (pos. 15). The jetting water circuit is powered by the water pump (pos. 14), while the warm circuit circulates automatically by gravity.
The tube heat exchanger (pos. 15) is supplied as a separate component. The water pump (pos. 14), however, can advantageously be supplied as an integrated unit driven by the liquid ring pump.

For detailed installation instructions, please refer to the cooling system product manual.

The need for extra cooling depends on several factors and can be assessed more accurately using Samson's online calculation tool Solution Finder, where various system configurations can be simulated and evaluated.

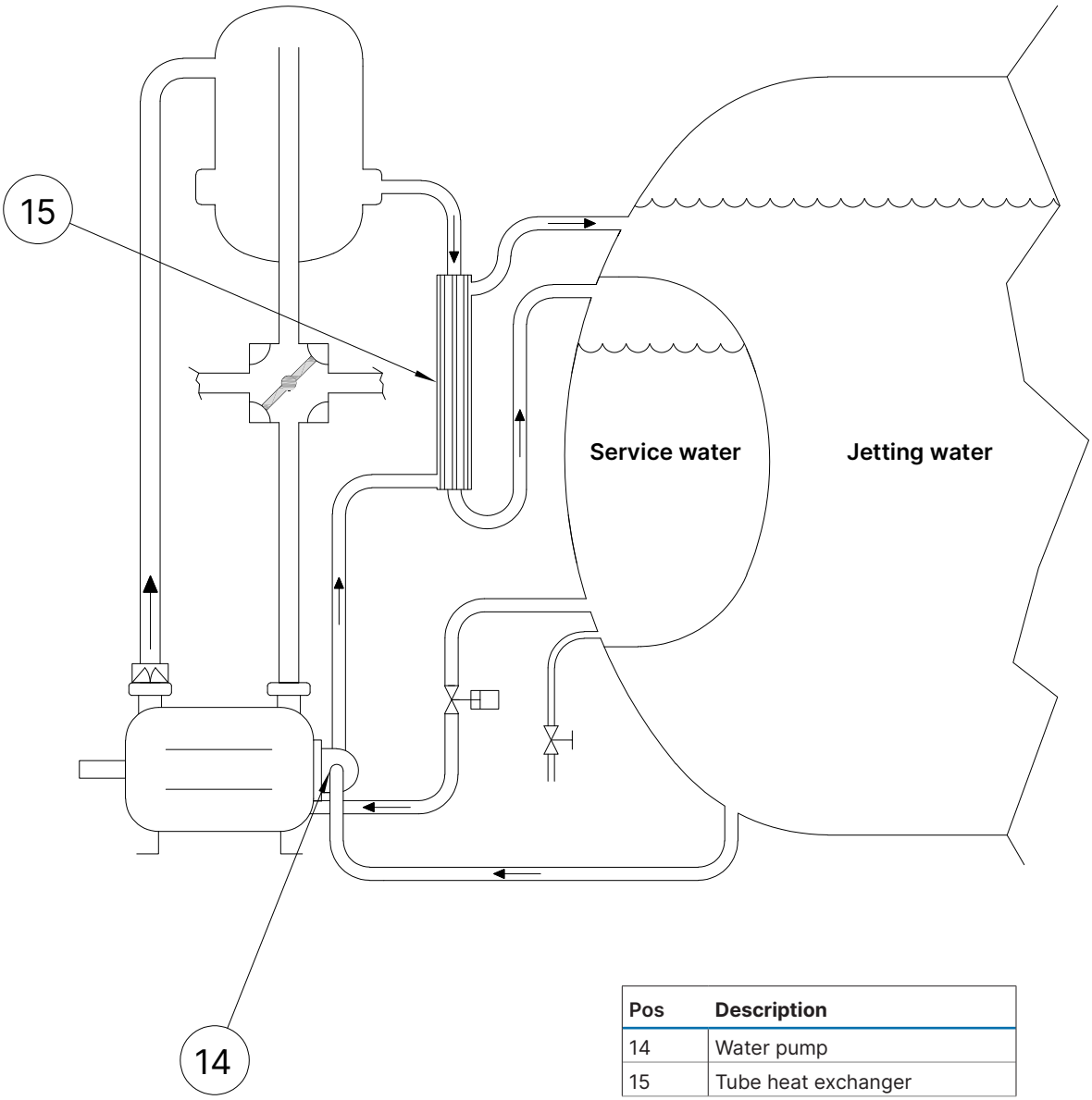

Pos	Description
14	Water pump
15	Tube heat exchanger

DOC1638189

3.3 Additional cooling by a fan cooler

Why?
A secondary option for adding additional cooling is to install an air cooler (pos. 16), which is particularly relevant for vacuum vehicles that do not carry jetting water.

How?
The cooling circuit for the air cooler is established between the top and bottom of the water tank and is driven by the water pump (pos. 14), which can advantageously be ordered as an integrated unit driven by the liquid ring pump.

For detailed installation instructions, please refer to the product manual for cooling systems.

The need for extra cooling depends on several factors and can be assessed more accurately using Samson's online calculation tool Solution Finder, where various system configurations can be simulated and evaluated.

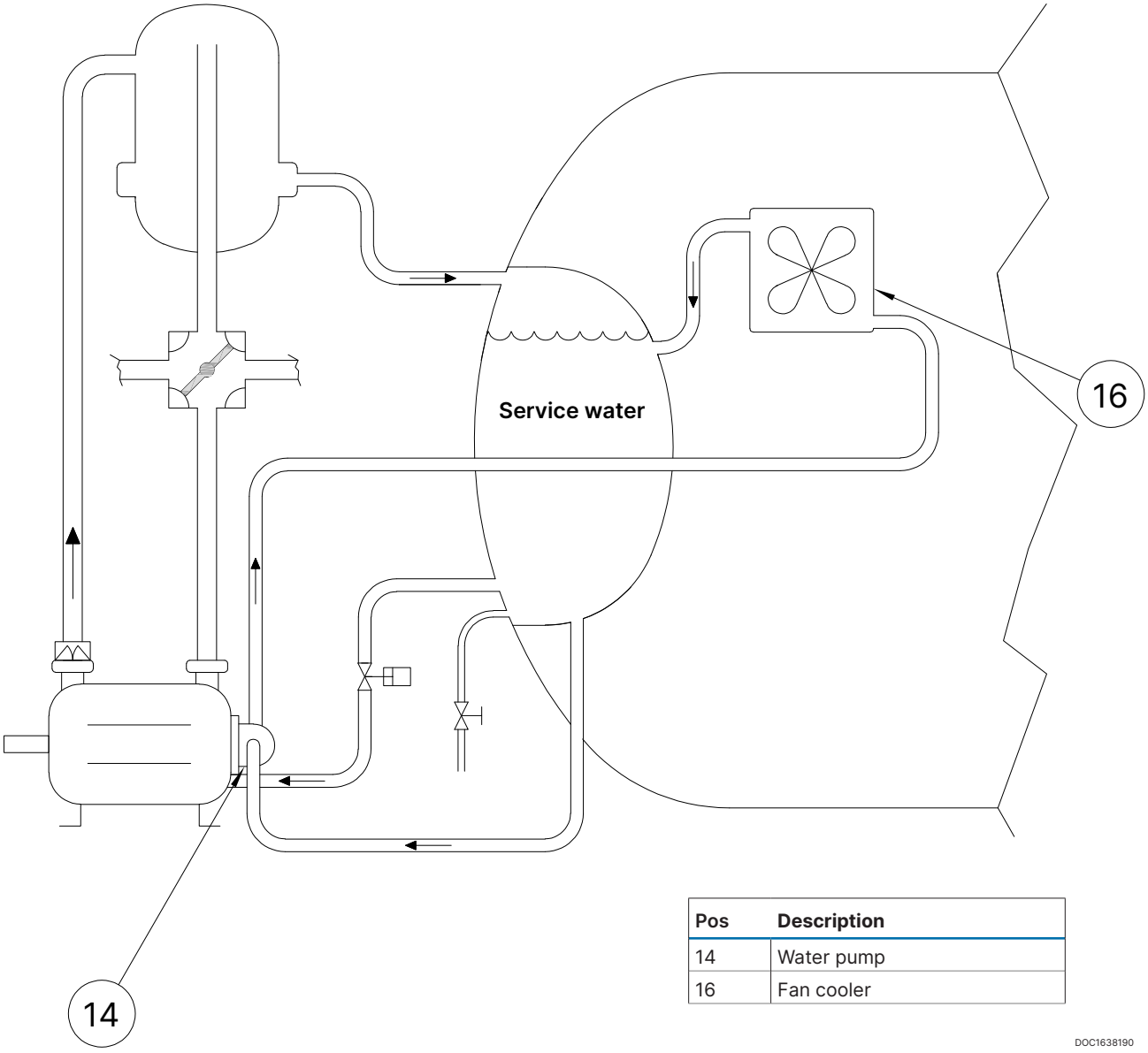

Pos	Description
14	Water pump
16	Fan cooler

DOC1638190

3.4 System layout and how to build an ATEX Zone 1/1 system

Systems in zone 1 category can be build according to the fig 1638187.

The shut-off valve between the water tank and the pump (pos. 5) must be automatically operated and activated when the pump starts.

One Atex safety device is required measuring the water minimum level in the water tank (pos. 8)

If the water level is too low, it's required that the pump is stopped automatically. The vacuum pump must be ordered for zone 1.

The Atex safety devices required for zone 1 installation is listed below.

Zone 1
This chapter relate to Ex Zone 1/1 approved pumps
(ATEX category 2 pumps)

The system must be build with the ATEX devices specified.

The maximum working pressure must not exceed specifications, by installing a safety valve

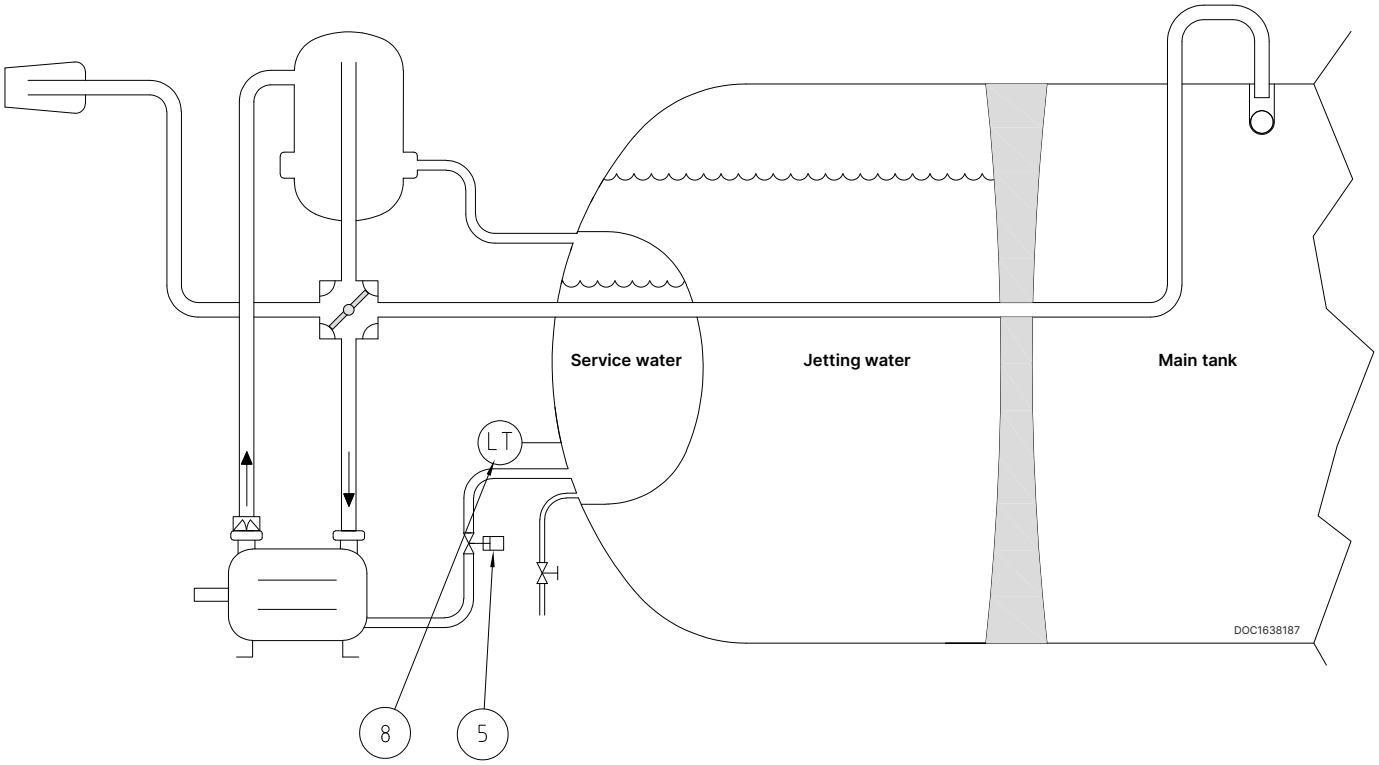

Pos	Description	Safetey device	Set
5	Shut-off valve	No	
8	Level switch	Yes	Min. 50 L / 13.2 US gal

3.5 System layout and how to build an ATEX Zone 0/1 system

Systems in zone 0 category can be build according to the fig 1638188.
The shut-off valve between the water tank and the pump (pos. 5) must be automatically operated and activated when the pump starts.
The water supply to the pump must be connected to botch ends of the pump and each pipeline installed with a flow sensor (pos. 9 & 10).
A level sensor measuring the water minimum level in the water tank (pos. 8) is required.
Temperature sensors measuring the bearing temperature on the pumps (pos. 12 & 13) is required.
A temperature sensor (pos. 11) must be installed on the discharge side of the pump.

If the system is designed with a drain valve (pos. 7) connected to the water tank it must be automatically operated.
The vacuum pump must be ordered for zone 0.

The Atex safety devices required for zone 0 installation is listed below.

Zone 0
This chapter relate to Ex Zone 0/1 approved pumps (ATEX category 1 pumps)

The system must be build with the ATEX devices specified.

The maximum working pressure must not exceed specifications, by installing a safety valve

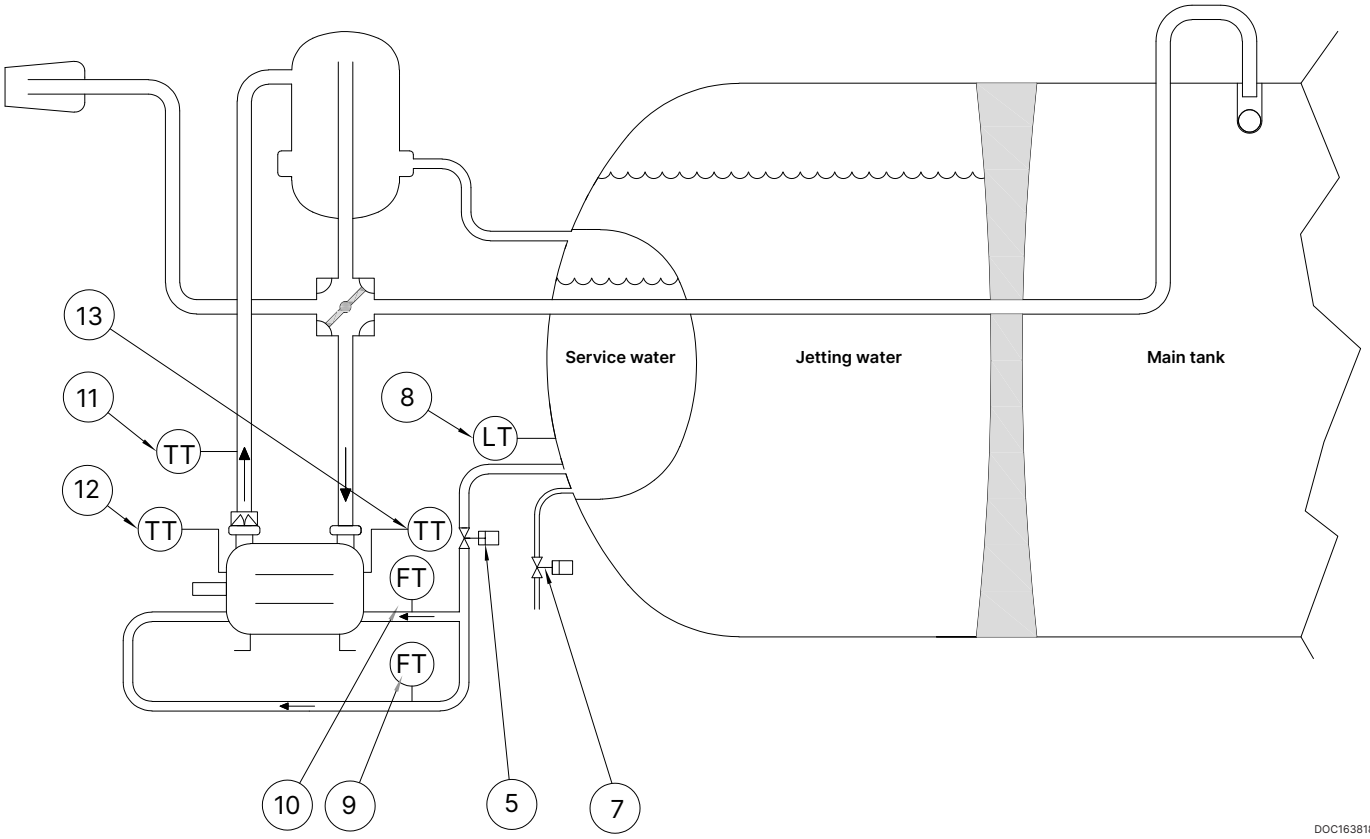

Pos	Description	Safetey device	Set
5	Shut-off valve	No	
8	Level switch	Yes	Min. 50 L / 13.2 US gal
9	Flow meter	Yes	Min. 2 L/min. / 0.53 US gal/ min max. delay 10 sec.*
10	Flow meter	Yes	Min. 2 L/min. / 0.53 US gal/ min max. delay 10 sec.*
11	Temperature transmitter	Yes	Max. 80°C / 176°F
12	Temperature transmitter DE	Yes	Max. 90°C / 194°F **
13	Temperature transmitter NDE	Yes	Max. 90°C / 194°F **

* Maximum pipe length from liquid ring pump 2m / 6.6 ft.
See specifications from chapter 2.1 - Water pipe connection, dimension and length.

** Temperature transmitters (pos. 12 & 13) are placed in existing M10×1 threaded holes in the bearing housings. This is done by unscrewing existing plugs and mounting sensors instead.

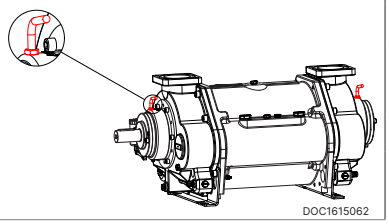

3.6 Safety system

ATEX safety system must be designed in accordance to ISO 80079-37 Table E.1, shown below :

- ATEX Zone 0 Hardware Fault Tolerance 0
- ATEX Zone 1 Hardware Fault Tolerance 0

Zone 1
This chapter relate to Ex Zone 1/1 approved pumps (ATEX category 2 pumps)

Zone 0
This chapter relate to Ex Zone 0/1 approved pumps (ATEX category 1 pumps)

TABLE E.1 Application of ignition protection type								
Hardware Fault Tolerance (related to effective ignition source)	2	1	0	1	0	-1	0	-1
Ignition protection type achieved by the control system (safety device)								
Hardware Fault Tolerance for the safety system	-	0	1	-	0	1	-	0
Safety Integrity Level (IEC 61508)	-	1	2	-	1	2	-	1
Performance Level (EN 13849-1)		c	d		c	d		c
Category acc. to ISO EN13849-1		2	3		2	3		2
Ignition protection type according to this standard		b1	b2		b1	b2		b1
Equipment Protection Level achieved after implementation of safety measures								
EPL Group II, III	Ga			Gb			Gc	
Zone classification	**Zone 0**			**Zone 1**			**Zone 2**	

NOTE 1 Hardware Fault Tolerance (HFT):

- -1 indicates effective ignition source during normal operation (incendive in normal operation)
- 0 indicates that the equipment under control is safe in normal operation, no effective ignition sources to be expected during normal operation. One single fault may cause the apparatus to fail so a single system is necessary to avoid ignition sources during normal operation.
- 1 indicates that the apparatus is safe with one single fault. Two independent faults may cause the apparatus to fail.
- 2 indicates that the apparatus is safe with two independent faults. Three faults may cause the apparatus to fail.

NOTE 2 SIL1 or SIL2 indicates the Safety Integrity Level of the Safety device according to IEC 61508 series. PL c or PL d indicates the Safety Performance Level of the Safety device according to ISO 13849 series.

NOTE 3 ”-” means that no Safety device is required.

For Zone 1/1 approved pumps SIL1 or Performance Level c is required.

For Zone 0/1 approved pumps SIL2 or Performance Level d is required.

3.7 Water separator and water tank

At Samson Pumps, we recommend using our standard water separator to ensure optimal water air separation.
Each separator is precisely engineered to match the capacity of our pumps, leaving only a simple water tank design for the customer to complete.

Avoid pressure loss by placing the water separator in close range to the pump, so that the length of the outlet pipe does not exceed 3000 mm.

The service water outlet from the water tank to the pump must be positioned at least 300 mm above the pump shaft centerline. This ensures the correct influx pressure and the correct flow of water.

The water supply connection between the water tank and pump must be dimensioned as specified in specifications.

Additional information about our water separator can be found at www.samson-pumps.com, or by contacting a member of our specialist team.

Water separator must be mounted in such way that the minimum level of water is minimum 0.5 m above the pump´s shaft

When operating the drain valves, the outlet may contain explosive gases, corresponding to the classification of the pump´s suction side

The exhaust from the liquid separator will have the same zone classification as the pump's suction side

Zone 1
This chapter relate to Ex Zone 1/1 approved pumps (ATEX category 2 pumps)

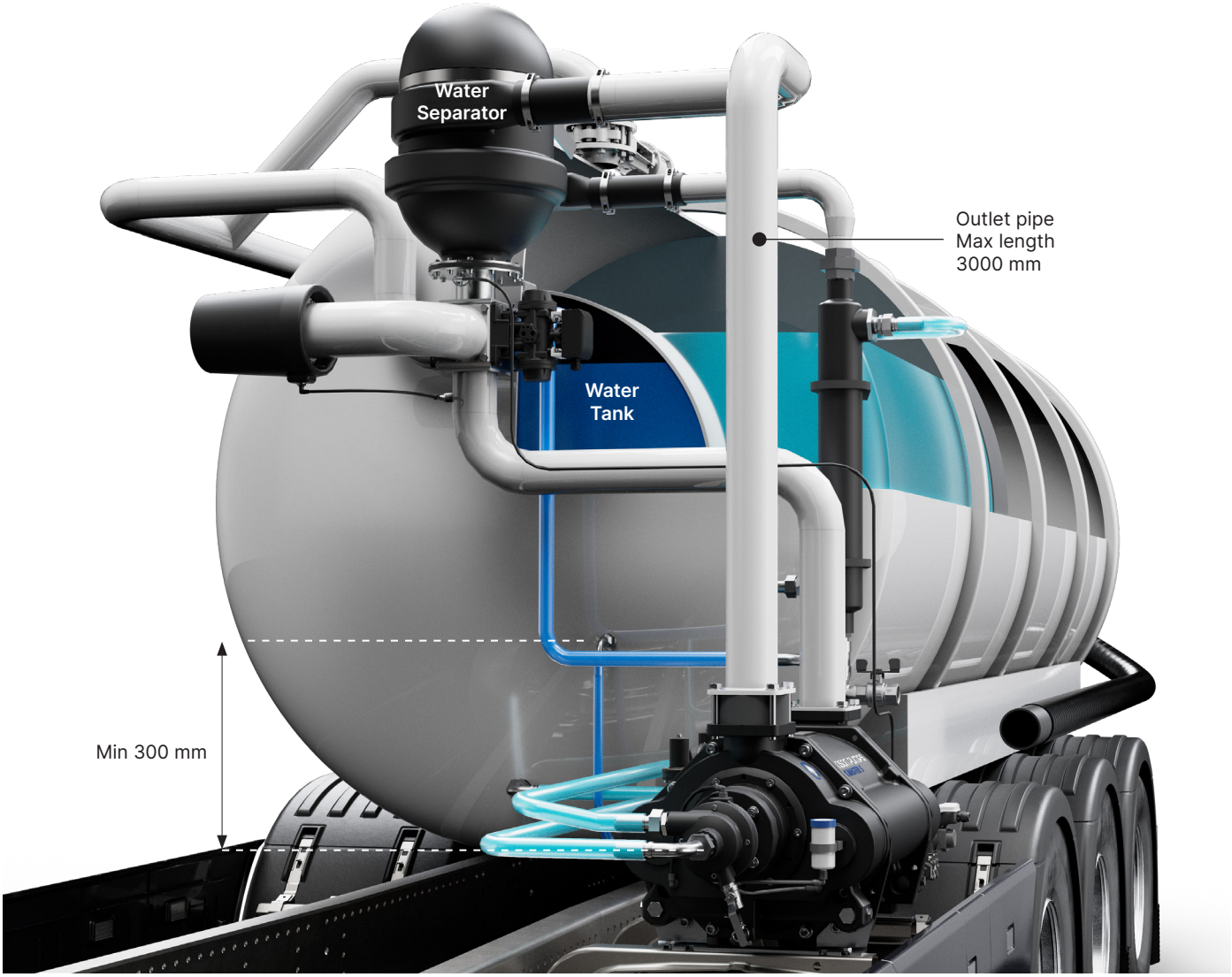

DOC1659079

3.8 Water tank placement

There are basically three ways of integrating the water for the liquid ring pump in the vehicle structure.

1. Water inside the slurry tank
Placing the water inside the slurry tank, can be done cost effectively by welding in a second dished end.
The colling effect from the slurry and vehicle structure will be significant.

Solution Finder colling effect: 1.0

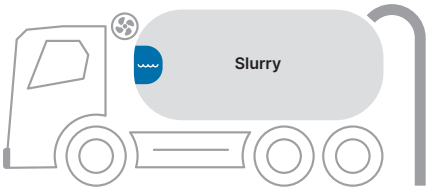

2. Water inside the jetting water tank
Placing the water inside the jetting water tank, can be done cost effectively by welding in a second dished end.
The colling effect from the jetting water and vehicle structure will be significant.

Solution Finder colling effect: 1.2

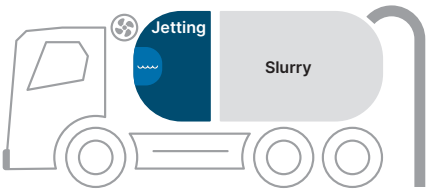

3. Water outside
Placing the water in a tank, separated from the overall vehicle-structure, will provide only a minimum of cooling effect which may require an upsized fan cooler.

Solution Finder colling effect: 0.3

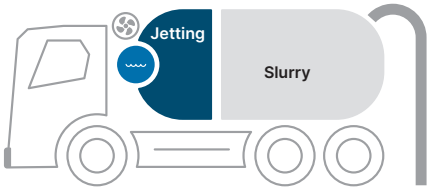

3.9 Water consumption - Metric

It is possible to design the liquid separator so that almost 100% of the water is separated from the air.
However, the air will be heated up and thereby it can content more water. Also, the relative humidity will go up and end near 100%.
So, the air will flow into the pump with maybe 50% relative humidity at a low temperature and be discharged at a higher temperature and humidity. Therefore, there will be an evaporation from the system.

Truck Master 4

Vacuum \ Temp		Choose your water temperature				
		20°C	**30°C**	**40°C**	**50°C**	**55°C**
50%	L/h	4	12	24	44	54
70%	L/h	2	7	15	26	32
80%	L/h	2	5	10	17	21
		Water consumption = Liters per hour				

Truck Master 2

Vacuum \ Temp		Choose your water temperature				
		20°C	**30°C**	**40°C**	**50°C**	**55°C**
50%	L/h	1	3	6	11	13
70%	L/h	1	2	4	7	8
80%	L/h	1	1	2	4	5
		Water consumption = Liters per hour				

Truck Master 5

Vacuum \ Temp		Choose your water temperature				
		20°C	**30°C**	**40°C**	**50°C**	**55°C**
50%	L/h	7	20	41	73	89
70%	L/h	4	12	24	44	54
80%	L/h	3	8	16	29	36
		Water consumption = Liters per hour				

Truck Master 3

Vacuum \ Temp		Choose your water temperature				
		20°C	**30°C**	**40°C**	**50°C**	**55°C**
50%	L/h	2	7	14	25	31
70%	L/h	1	4	9	15	19
80%	L/h	1	3	6	10	13
		Water consumption = Liters per hour				

Truck Master 6

Vacuum \ Temp		Choose your water temperature				
		20°C	**30°C**	**40°C**	**50°C**	**55°C**
50%	L/h	10	30	61	109	134
70%	L/h	6	18	37	65	80
80%	L/h	4	12	24	44	54
		Water consumption = Liters per hour				

3.10 Water consumption - U.S. Imperial

It is possible to design the liquid separator so that almost 100% of the water is separated from the air.
However, the air will be heated up and thereby it can content more water. Also, the relative humidity will go up and end near 100%.
So, the air will flow into the pump with maybe 50% relative humidity at a low temperature and be discharged +at a higher temperature and humidity. Therefore, there will be an evaporation from the system.

Truck Master 2						
Vacuum \ Temp		Choose your water temperature				
		68°F	86°F	104°F	122°F	131°F
50%	US gal/min	0.004	0.013	0.026	0.048	0.057
70%	US gal/min	0.004	0.009	0.018	0.031	0.035
80%	US gal/min	0.004	0.004	0.009	0.018	0.022
		Water consumption = US gallons per minute				

Truck Master 3						
Vacuum \ Temp		Choose your water temperature				
		68°F	86°F	104°F	122°F	131°F
50%	US gal/min	0.009	0.031	0.061	0.110	0.136
70%	US gal/min	0.004	0.018	0.040	0.066	0.084
80%	US gal/min	0.004	0.013	0.026	0.044	0.057
		Water consumption = US gallons per minute				

Truck Master 4						
Vacuum \ Temp		Choose your water temperature				
		68°F	86°F	104°F	122°F	131°F
50%	US gal/min	0.018	0.053	0.106	0.194	0.024
70%	US gal/min	0.009	0.031	0.066	0.114	0.141
80%	US gal/min	0.009	0.022	0.044	0.075	0.092
		Water consumption = US gallons per minute				

Truck Master 5						
Vacuum \ Temp		Choose your water temperature				
		68°F	86°F	104°F	122°F	131°F
50%	US gal/min	0.031	0.088	0.181	0.321	0.392
70%	US gal/min	0.018	0.053	0.106	0.194	0.238
80%	US gal/min	0.013	0.035	0.070	0.128	0.159
		Water consumption = US gallons per minute				

Truck Master 6						
Vacuum \ Temp		Choose your water temperature				
		68°F	86°F	104°F	122°F	131°F
50%	US gal/min	0.044	0.132	0.269	0.480	0.590
70%	US gal/min	0.026	0.079	0.163	0.286	0.352
80%	US gal/min	0.018	0.053	0.106	0.194	0.238
		Water consumption = US gallons per minute				

3.11 Water evaporation

The water separator removes nearly 100% of the water and returns it to the water tank.
However, as the temperature increases, the air is able to hold more water vapor. As a result, the relative humidity will rise and approach 100%.

This means that the air may enter the pump at a low temperature with approximately 50% relative humidity, but it will be discharged at a higher temperature and with higher humidity. Consequently, some water will be lost because due to this evaporation.

3.12 Water requirement

During operation, it is expected that minor amounts of product may enter the pump, or that the process gas may react with the service water, causing the water to become chemically aggressive.
If the service water shows signs of chemical aggression, the water tank must be drained and refilled with fresh water to maintain proper operating conditions.

3.13 Draning in general

A failure to meet these specifications may result in damage to the pump

Below fig. is the recommended general procedures for draining the pump.

Drain schdule		
Vehicle operating envrioment	**Purpose**	**Frequency**
Above 0°C / 32°F	Drain to clean out dirt from the pump	As required
Below 0°C / 32°F	Winterzation! Drain to prevent freezing of the service water	Before every non-operation period
Storage	Drain to protect the pump during storage	Before storage

3.14 Draning for winterzation

A failure to meet these specifications may result in damage to the pump

Follow the instructions for each connestion in chapter "Function of connections" marked with:

3.15 Draning ATEX pumps - Important actions

When operating the drain valves, the outlet may contain explosive gases, corresponding to the classification of the pump´s suction side

Zone 1
This chapter relate to Ex Zone 1/1 approved pumps (ATEX category 2 pumps)

After draining, make sure that Zone 1/1 pumps are primed before start up.

3.16 Drain procedures for water-tank

Zone 0
This chapter relate to Ex Zone 0/1 approved pumps (ATEX category 1 pumps)

The water separator must be drained to prevent accumulation of impurities in the tank, and most importantly, to maintain a healthy and non-aggressive water quality. The water must be drained out at regular intervals, see chaper "Service operation and maintenance and inspection intervals".

3.17 Primary shut off valve

The liquid ring pump can handle liquid and particles in the inlet but it is of course recommendable to avoid this.
A dome valve or float valve will ensure that the suction will be closed when the liquid level reaches the top of the tank.
In many situations there will be foam on the liquid surface inside the tank. It can be difficult to avoid that this will be transported into the suction line before the dome valve / float valve will close.
Therefore, it will be recommended to make a combination of a filter and dome valve / float valve as illustrated below.
The filter will prevent particles lifted by the foam to enter the pump.

DOC1627393

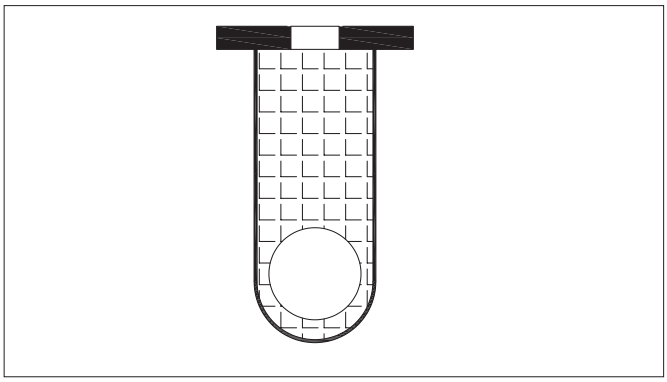

3.18 Non-return valve

When the pump is stopped with vacuum applied, the non-return valve will prevent air and water from entering back into the suction line. The non-return valve must be installed on the discharge side of the pump and immediately before the discharge flange.

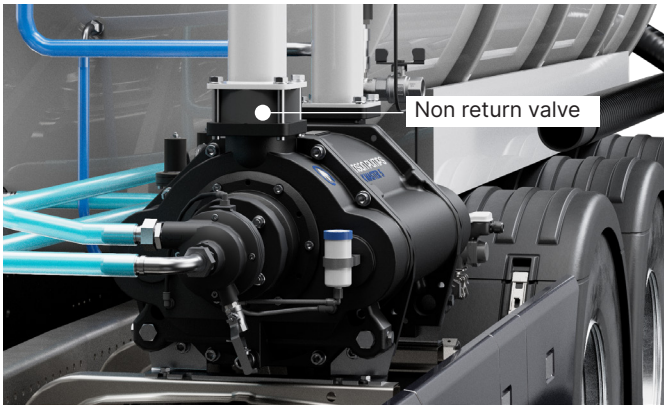

3.19 Rotating or warm parts must be covered

Rotating or hot components must be shielded to ensure they do not pose a risk of personal injury. The temperature of accessible surfaces must not exceed 80°C.

3.20 Pipe system dimensioning

The exhaust from the liquid separator will have the same zone classification as the pump's suction side

The pipe system should be mounted so that the horizontal pipes have a min. of 1% decline back towards the liquid separator. Table below can be used for reference values.

Model		Pipe system	Non return valve
Truck Master 2	Suction side	DN50	DN50
	Outlet side	DN50	
Truck Master 3	Suction side	DN65	DN80
	Outlet side	DN65	
Truck Master 4	Suction side	DN100	DN100
	Outlet side	DN100	
Truck Master 5	Suction side	DN100	DN100
	Outlet side	DN100	
Truck Master 6	Suction side	DN125	DN125
	Outlet side	DN125	

3.21 Cavitation mitigation - Vacuum control valve

When the temperature reaches the boiling point of the water, steam bobbles will be created in the liquid ring.
These bobbles cannot exist when they enter the discharge side of the pump and therefore, they will collapse.

The impact force on the surface of the rotor and flow plate will damage the pump and can lead to a total breakdown. It is a very harmful situation that must be avoided.

It is the combination of the pressure and the temperature that will lead to the cavitation.

Therefore, it is recommended to install a vacuum control valve, see illustration below that shows a clockwise rotating pump.
If counter-clockwise rotating pump, mount in opposite manifold.

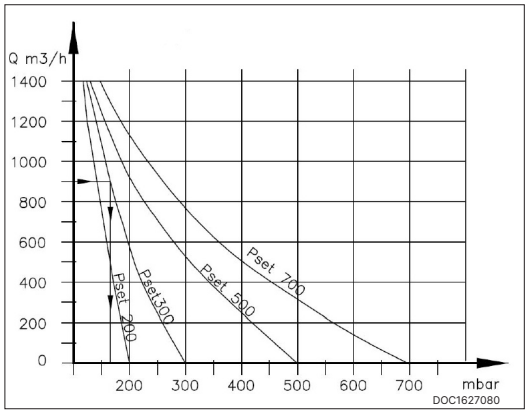

Vacuum control valves required				
Truck Master 2	Truck Master 3	Truck Master 4	Truck Master 5	Truck Master 6
1 pcs	1 pcs	1 pcs	2 pcs	2 pcs

Vacuum control valve placement

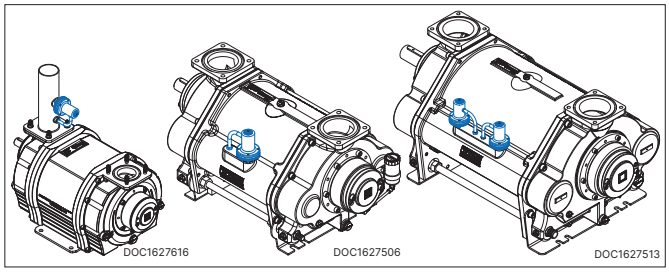

Zone 0
This chapter relate to Ex Zone 0/1 approved pumps (ATEX category 1 pumps)

Vacuum		50%	75%	80%	90%
MAX discharge temperature	°C	70	50	40	30
	°F	158	122	104	86

Note that the temperature of the gas inside the pump will heat up the water and the water surface therefore will become a higher temperature than the measured temperature on the discharge side of the pump. Cavitation will therefore start at a lower temperature and the maximum discharge temperature of the water must be kept lower.

3.22 Adjustment - Vacuum control valve

Step 1) When the pump is running, close the valve by turning the M6 set screw counter clockwise (-direction)
Step 2) Open the valve by turning the set srew clockwise (+direction), until the required set pressure is reached.

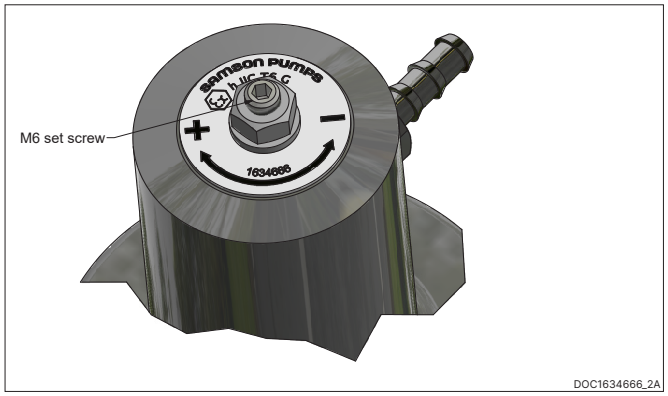

Illustration below shows working principle of the vacuum control valve.

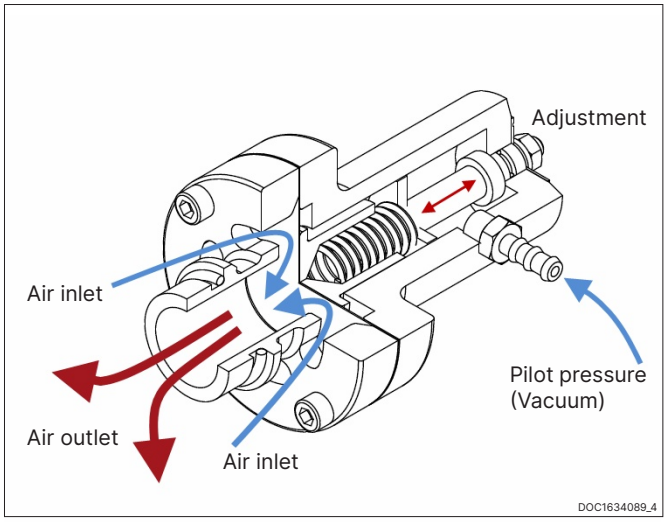

3.23 Suction filter

Zone 1
This chapter relate to Ex Zone 1/1 approved pumps (ATEX category 2 pumps)

Zone 0
This chapter relate to Ex Zone 0/1 approved pumps (ATEX category 1 pumps)

In installations where there is a risk of sucking foreign elements into the pump, a filter must be mounted on the pump's suction side with a maximum mask size of 2 mm / 0.08 in.

4 Installation and start-up

4.1 Securing the pump

Installation requirements must be observed, otherwise there is a risk of damage

The pump must be installed on a stable foundation, which must be level and stable, so that the pump is not twisted or exposed to a profile distortion.

The pump must be installed with 4 pcs. M16 bolts, 2 pcs. in front and 2 pcs. in back.
The bolts must be tightened to 180 Nm / 132.8 lbf-ft (A).

Truck Master 2 - 3

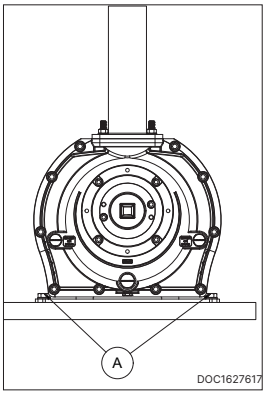

Truck Master 4 - 5 - 6

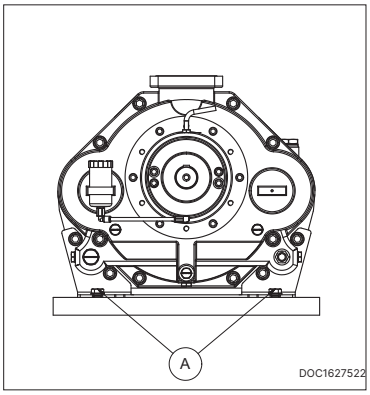

4.2 Priming of the pump

Zone 0
This chapter relate to Ex Zone 0/1 approved pumps (ATEX category 1 pumps)

When operating the drain valves, the outlet may contain explosive gases, corresponding to the classification of the pump´s suction side

After draining the liquid ring pump, prime the pump before start-up.

If the pump is stopped due to missing flow signal from flow, sensors pos 9 or pos 10 the control system must be designed to prime the pump before any restart is possible.

The priming procedure shall open stop valve pos 5 and stay open until the flow sensors pos 9 and pos 10 has positive flow for a continuously period of 10 seconds.
Only after this period the system can be started.

4.3 Connection to the vehicle

- Check for foreign objects in the pump and physical damage on pump
- Gaskets to be handled with highest degree of caution
- Gasket and sealing surfaces must be cleaned before assembly

External effects on the pump may lead to leakage and, as a result, a potential risk of explosion

Immediate before connecting the pipes, remove protective covers. Connection of the pump's suction and pressure pipe connections must be made with a gasket in between (C).

Truck Master 2 - 3

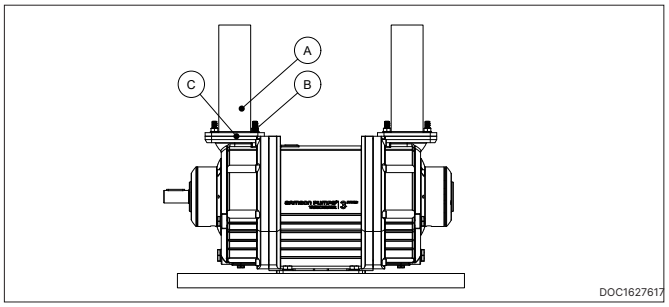

The M10 bolts must be tightened with 55 Nm / 41 lbf-ft and M12 with 100 Nm / 73.8 lbf-ft (B).
In order to prevent tensions in the pump, the pipe connections (A) must be tensionless while tightening the bolts.

Truck Master 4 - 5 - 6

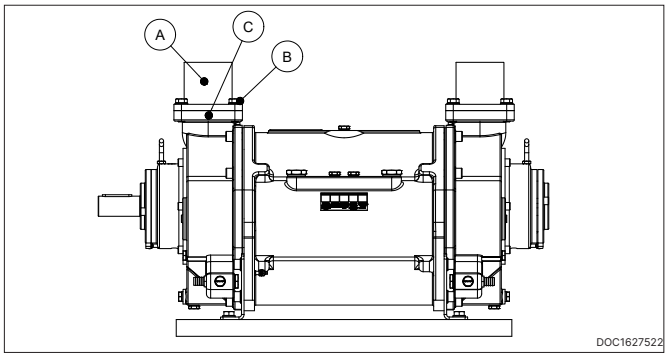

The M16 bolts must be tightened with 180 Nm / 132.8 lbf-ft (B).
In order to prevent tensions in the pump, the pipe connections (A) must be tensionless while tightening the bolts.

4.4 Transmission

The pump can be connected direct or through belt transmission. For belt transmission, it must be ensured that the permissible radial force is not exceeded. See specifications.

For belt transmission, note the direction of rotation, see illustration below.

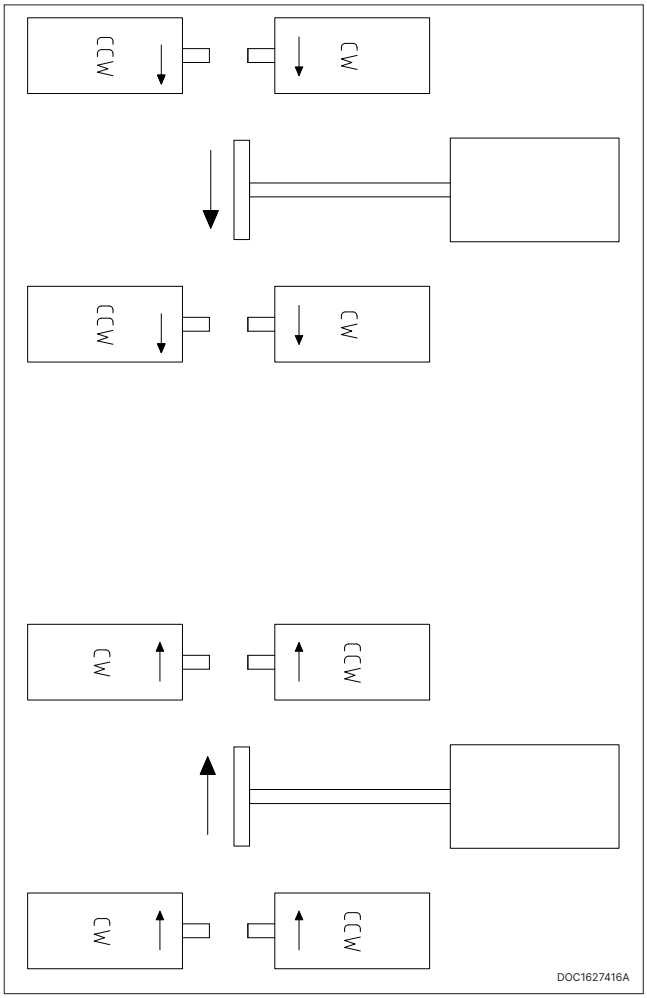

4.5 Earth connection requirements

The pump must be connected to earth to prevent static electricity. Static electricity is a potential source of ignition
The earthing (grounding) connection for the pump must have a full metal to metal contact

A failure to meet these specifications may result in damage to the pump and a potential risk of explosion

Zone 1
This chapter relate to Ex Zone 1/1 approved pumps (ATEX category 2 pumps)

Zone 0
This chapter relate to Ex Zone 0/1 approved pumps (ATEX category 1 pumps)

The pump must be protected from the creation of sparks in connection with static electricity, in accordance with the applicable regulations for use in the current categories.

Truck Master 2 - 3

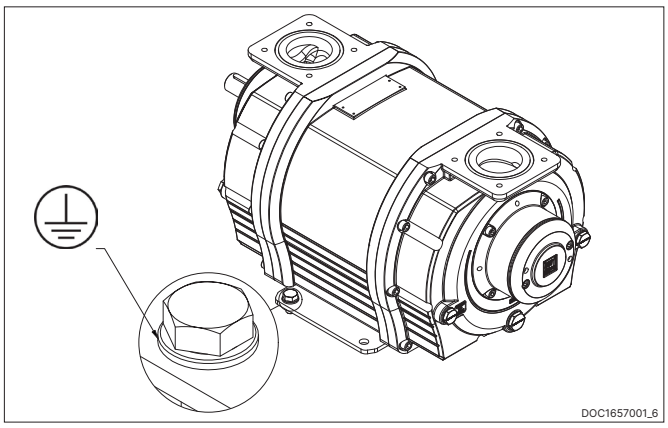

Truck Master 4 - 5 - 6

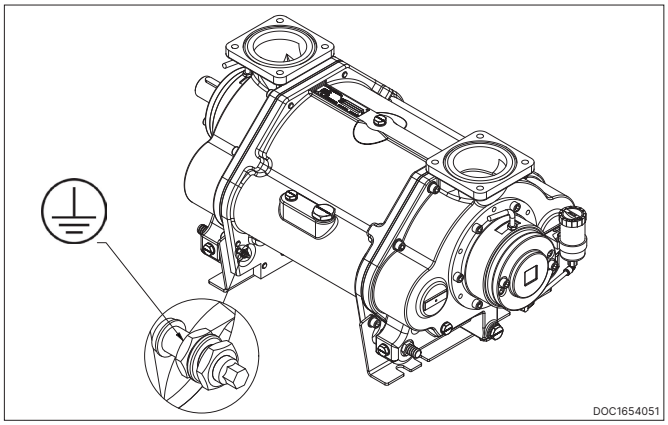

4.6 Direction of rotation

Check the direction of rotation by briefly starting the pump.

The direction of rotation of the rotor must correspond to the direction arrow!

Below left, a right-side pump is shown which has a clockwise direction of rotation (CW)
Below right, a left-side pump is shown which has a counter-clockwise direction of rotation (CCW)

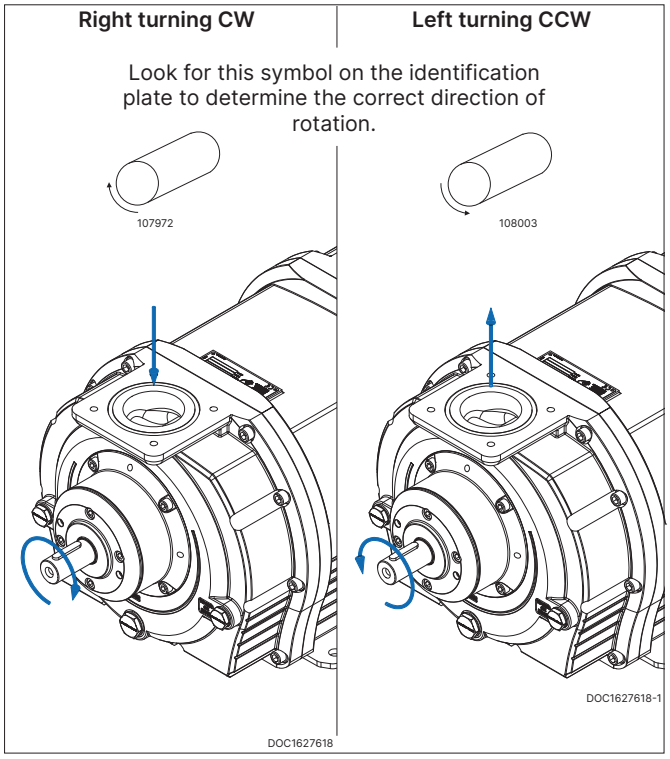

4.7 Prior to start-up

- Do not start the pump without water, as this will damage the mechanical shaft seals
- Do not start the pump if it is completely filled with water
- Do not start the pump before the grease cartridges have been activated, as this can damage the pump (if equipped)
- Stop the pump immediately if the rotational direction does not correspond to the directional arrow
- A failure to follow the above guidelines may result in damage to the pump

4.8 Installation of tube heat exchanger

A failure to meet these specifications may result in malfunction of system and damage to unit

Installation on truck

Horizontal installation

Completely horizontal installation is not recommended due to air voids.

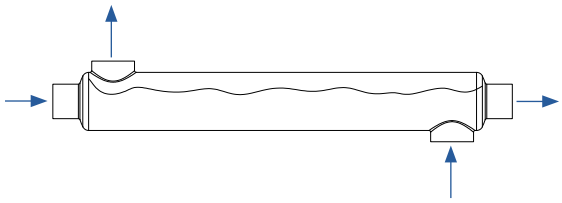

DOC962000072_2

Angled horizontal installation

Horizontal installation must be angled at least 10° in order to prevent air voids.

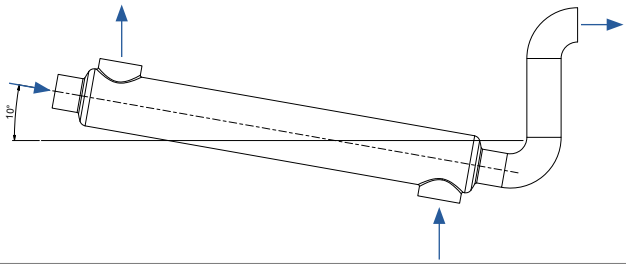

DOC962000072_3

Vertical installation

Vertical installation is recommended due to optimal conditions of cooling.

Height A - Must be minimum 150 mm for optimal performance of the system.

Height B - Must be minimum 0 mm for optimal performance of the system.

See Illustration DOC1638189 on page 18.

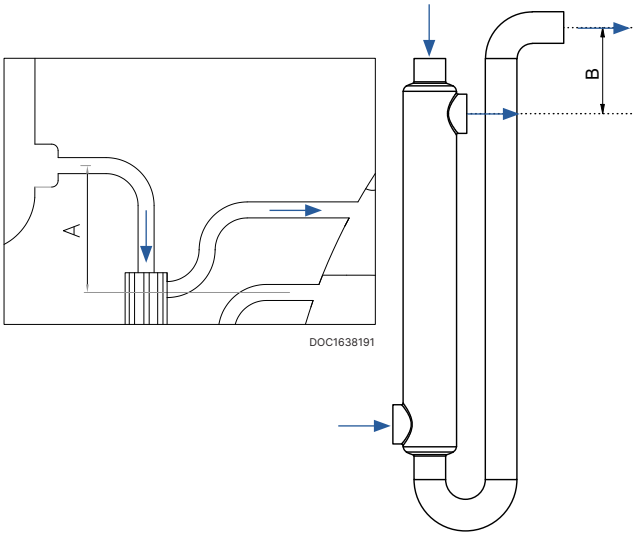

DOC1638191

DOC962000072_1

4.9 Water pump

The water pump is installed at the non-drive end of the liquid ring pump and is driven by the rotor of the liquid ring pump.

It has an integrated mechanical shaft seal and is cooled by the service water supplied from the liquid ring pump.

Service water is supplied to the water pump from the pressure side of the liquid ring pump via connection 2.

The water pump is filled from below, and the service water is discharged through connection 1 of the water pump to the vacuum side of the liquid ring pump. This arrangement ensures that the mechanical shaft seal of the water pump remains continuously submerged in water, thereby eliminating the risk of dry running.

Connection 3 of the water pump is intended for jetting water being drawn into the pump, while connection 4 is intended for jetting water being discharged from the pump.

Connection 5 serves as the drain connection, allowing the chamber to be drained of water.

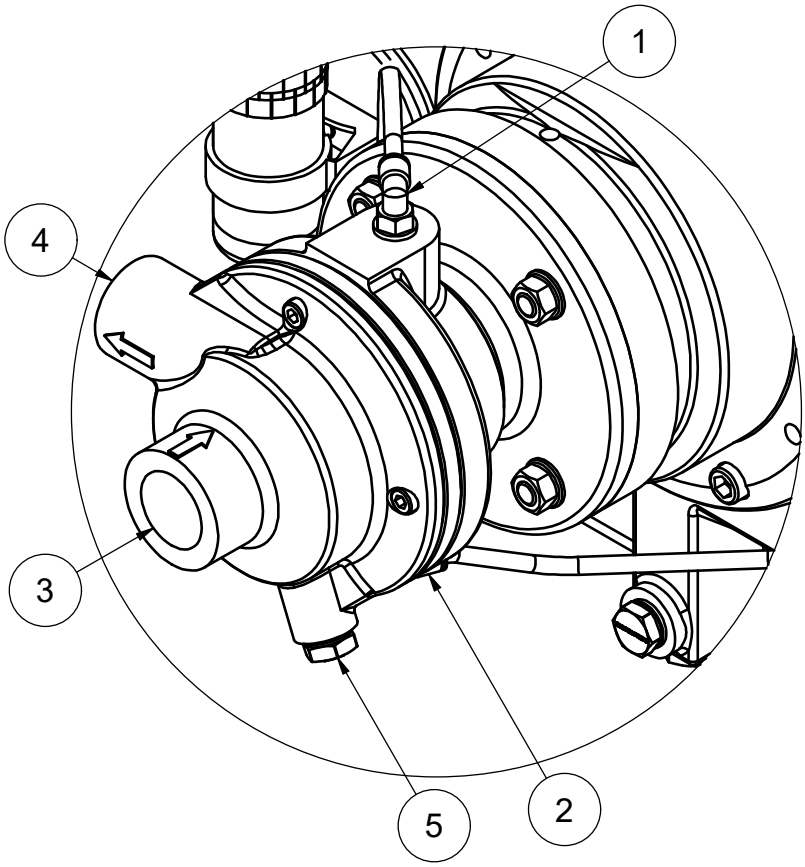

Pos	Description
1	Service water OUTLET
2	Service water INLET
3	Jetting water INLET
4	Jetting water OUTLET
5	Drain

DOC1615082_1

5 Service operation and maintenance and inspection intervals

- Check for foreign objects in the pump and physical damage on pump
- Gaskets to be handled with highest degree of caution
- Gasket and sealing surfaces must be cleaned before assembly

Section	Operation	Standard	Ex Zone 1/1	Ex Zone 0/1
5.1	Inspection of bearings	Weekly	Daily	Monitored[1]
5.1	Lubrication of bearings	500 hours / 6 months[3]	500 hours / 6 months[3]	Automatic[2]
5.2	Visually inspect for leakage	Weekly	Weekly	Weekly
3.1.3	Drain water separator	Daily	Daily	Daily
5.3	Check grease cartridges	Weekly	Weekly	Weekly
5.4	Inspection of ATEX safety device	NA	Monthly	Monthly
5.5	Inspection and cleaning (if necessary) of water supply pipe	Monthly	Monthly	Monthly
5.6	Calibration of ATEX safety device	NA	Annually	Annually
5.7	Overhaul of pump	NA	10.000 duty hours	10.000 duty hours
5.8	Inspection and cleaning of internal channels	Monthly	Monthly	Monthly
5.9	Inspection of coupling	Annually	2.000 hours / 3 months[4]	2.000 hours / 3 months[4]
5.10	Winterization when below	0°C / 32°F	0°C / 32°F	0°C / 32°F
5.11	Inspection of hoses on water pump	Weekly	Daily	Daily
6	Troubleshooting	As required	As required	As required

1 **-Monitored** = Inspection must be carried out by the overall vehicle control system
2 **-Automatic** = Automatic grease cartridges is mandantory
3 **-Per 500 duty hours** = The bearings must be lubricated with grease of type SKF LGHQ2, per 500 duty hours or min. once every six months, whichever comes first. Only Truck Master 4, 5 & 6. (Truck Master 2 & 3 are lifetime lubricated)
4 **-Per 2000 duty hours** = The coupling must be inspected per 2000 duty hours or every 3 months, which ever comes first.

5.1 Inspection and lubrication of bearings

Bearing temperature limites					
Model	**Truck Master 2**	**Truck Master 3**	**Truck Master 4**	**Truck Master 5**	**Truck Master 6**
Drive end (DE)	90°C	90°C	90°C	90°C	90°C
	194°F	194°F	194°F	194°F	194°F
Non drive end (NDE)	90°C	90°C	90°C	90°C	90°C
	194°F	194°F	194°F	194°F	194°F

Bearing lubrication quantities per 500 duty hours					
Model	**Truck Master 2**	**Truck Master 3**	**Truck Master 4**	**Truck Master 5**	**Truck Master 6**
Drive end (DE)	/	/	30 g	40 g	50 g
	/	/	0.9 oz	1 oz	4.1 oz
Non drive end (NDE)	/	/	10 g	20 g	30 g
	/	/	0.3 oz	0.6 oz	1 oz

Be alert of unfamiliar sounds from bearing.
The measurements are preformed after MIN. 30 min. of operation.
If operation time is less than 30 min., perform the measurements immediately after longest period of operation.
It is recommended to lubricate the bearings while pump is running, if possible.
Over-lubrication of bearings may result in bearing damage! Do NOT exceed the amount of grease specified below!
Temperature of bearings must not exceed the permitted temperature described in system layout.

5.2 Visually Inspecting for leakage

The pump and pipe system around the pump must be inspected for leakage once a week. The inspection must be performed when the pump is both operating and idle. Any leaks must be repaired before operation may continue.

5.3 Check grease cartridges (Category 2 pumps with grease cartridges)

To prevent electrostatic discharge in hazardous areas, only wet cleaning is permitted
Appropriate measures must be taken to prevent electric discharge

Zone 1
This chapter relate to Ex Zone 1/1 approved pumps (ATEX category 2 pumps)

Zone 0
This chapter relate to Ex Zone 0/1 approved pumps (ATEX category 1 pumps)

If the pump is equipped with an automatic lubrication feature. It must be inspected and replaced as needed.

When the pump is commissioned for the first time, the cartridges must be activated by turning the arrow in the clockwise direction.

The cartridge is set to 12, which corresponds to an emptying time of 12 months.
The cartridge must be replaced when empty.

It is only allowed to use automatic lubricator of type **LAGD 125/ HQ2**.

Truck Master 4 - 5 - 6

Activating the grease cartridges (Accessories)

Turn the handle in NDE clockwise to position 12.
Turn the handle in DE clockwise to position 12.
The pump has been lubricated from factory and is ready to start.

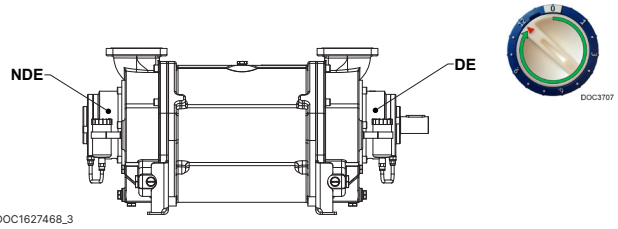

5.4 Inspection of ATEX safety device

ATEX safety device must be inspected in accordance with table to ensure proper functionality. A failure to perform the required inspections will result in the discontinuation of the pump's approval

Zone 1
This chapter relate to Ex Zone 1/1 approved pumps (ATEX category 2 pumps)

Zone 0
This chapter relate to Ex Zone 0/1 approved pumps (ATEX category 1 pumps)

Safety devices to be inspected in accordance with applicable regulations.
The components that make up the safety device can be found in the system layout.
Dome Valve / Float valve must be cleaned.
ATEX safety devices can be found in capter "System layout (Zone" 0/1)

5.5 Inspection and cleaning of water supply pipe

The pipe connection between the liquid separator and pump must be inspected at least once a month, and any contaminants must be removed.

5.6 Calibration of ATEX safety device

Zone 1
This chapter relate to Ex Zone 1/1 approved pumps (ATEX category 2 pumps)

Zone 0
This chapter relate to Ex Zone 0/1 approved pumps (ATEX category 1 pumps)

Safety devices (if equipped) must be calibrated once a year in accordance with the applicable requirements.
The pump may not be started before the instruments have been re-installed.

5.7 Overhaul of pump

Zone 1
This chapter relate to Ex Zone 1/1 approved pumps (ATEX category 2 pumps)

Zone 0
This chapter relate to Ex Zone 0/1 approved pumps (ATEX category 1 pumps)

ATEX approwed pumps must be serviced after 10.000 duty hours. This is done by sending the pump to Samson Pumps, or approved and certified partner, upon agreement. The pump must be cleaned before shipment.

Repairs carried out on ATEX pumps may only be performed by Samson Pumps, or approved and certified partner. If this requirement is not observed, and the pump's seal is broken, the pump's declaration of conformity is not valid and Samson Pumps is no longer responsible for any resulting consequences.

Non EX pumps has no limit of duty hours before service is required.

5.8 Inspection and cleaning of internal channels

The pump is designed with internal water channels for lubrication of the mechanical shaft seals.
Remove the plugs as listed below and clean the channels using a ø5 mm 150 mm / 5.9 in long screw driver or similar.
All connections can be identified in chapter "Connections".

Model	Connections to be cleaned	
	CW	CCW
TM 2	D1. D2	D1. D2
TM 3	D1. D2	D1. D2
TM 4	C1. C2. H2. H4. H5. H6	C1. C2. H1. H3. H5. H6
TM 5	C1. C2. H2. H4. H5. H6	C1. C2. H1. H3. H5. H6
TM 6	C1. C2. H2. H4. H5. H6	C1. C2. H1. H3. H5. H6

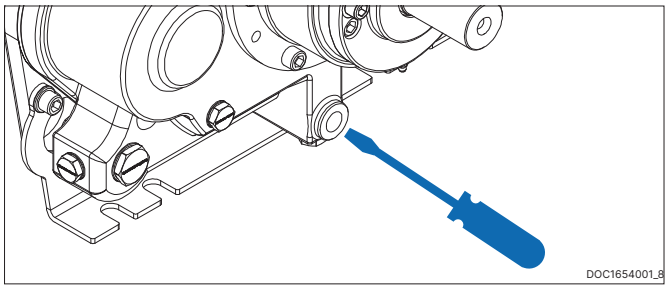

5.9 Inspection of coupling

It is recommended to perform a visual inspection on the coupling at least once a year.
Please pay special attention to the condition of coupling spiders.

- Since the flexible machine bearings of the driving and driven side settle with increasing load time, inspect the alignment of the coupling and re-align the coupling, if necessary.
- The coupling components must be inspected for damages.
- The screw connections must be visually inspected.

Zone 1
This chapter relate to Ex Zone 1/1 approved pumps (ATEX category 2 pumps)

Zone 0
This chapter relate to Ex Zone 0/1 approved pumps (ATEX category 1 pumps)

An inspection of the torsional backlash and a visual inspection of the flexible spider must be performed after 2,000 operating hours for the first time, at the latest after 3 months after start-up ot the coupling.

If you note insignificant or no wear on the spider upon this initial inspection, further inspections can each be performed after 4,000 operating hours or at the latest after 12 months, provided that the operating parameters remain the same.

It you note significant wear during the initial inspection so that it would be recommendable to replace the spider, please find out the cause if possible.
The maintenance intervals must be adjusted to the modified operating parameters without fail.

When reaching the wear limit maximum friktion, the spider must be replaced immediately, irrespective of the inspection intervals.

Monitoring of the general condition of the coupling can be done both at standstill and during operation. If the coupling is tested during operation, the operator must ensure an appropriate and proven test procedure (e. g. stroboscopic lamp, high-speed camera, etc.) which is definitely comparable to testing at standstill. If any distinctive features occur, an inspection must be made with the machine stopped.

Reaching the limits for replacing depends on the operating conditions and the existing operating parameters.

Illustration below clearly shows how the wear of the coupling can be measured in a user-friendly way when installed.

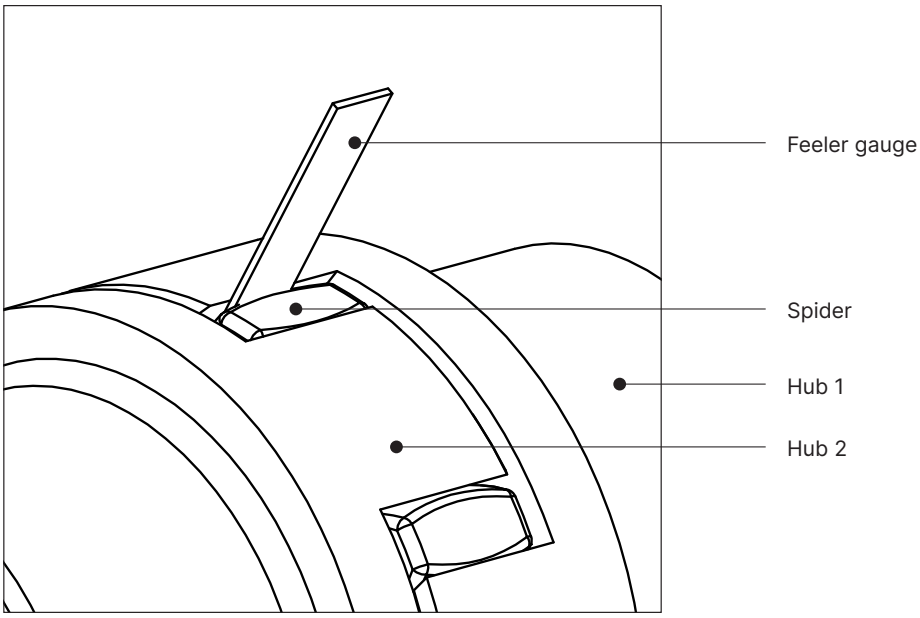

DOC1627639_1

In case of backlash > X mm, the flexible spider must be replaced. See table below for values.

COUPLING SIZE	LIMITS OF WEAR
38	3 mm
42	4 mm
48	
55	5 mm
65	
75	6 mm

5.10 Winterization

Installation requirements must be observed, otherwise there is a risk of damage

The following section addresses scenarios where the ambient temperature falls below the freezing point of water.

If the ambient temperature is below 0°C (32°F), there is a risk that water within the system may freeze. While ice formation will prevent the pump from operating, it will potentially cause damage to the pump itself.

Important: A frozen pump must never be started. Attempting to operate the pump while frozen may result in damage to both the pump and the transmission system. If the pump has not been properly drained and water has frozen inside, it is essential to fully thaw the pump before initiating operation.

To prevent freezing-related issues, we recommend implementing one of the following anti-freeze procedures on the vehicle:
1. Drain the pump at the end of each workday and refill it immediately before resuming operation.
2. Maintain the pump and water system above freezing using a heating system, potentially integrated with the jetting water antifreeze circuit.
3. Protect the water in the pump with antifreeze fluid suitable for the system.

5.11 Inspection of hoses on water pump

Visual inspection on the water connection hoses Pos 1 & Pos 2 on the water pump must be preformed accordingly to the intervals described in the table on page 34. See illustration below.
Please pay special attention to the condition of the hoses. If the hoses are worn, leaking or damaged in any way, they must be replaced.

Zone 1
This chapter relate to Ex Zone 1/1 approved pumps (ATEX category 2 pumps)

Zone 0
This chapter relate to Ex Zone 0/1 approved pumps (ATEX category 1 pumps)

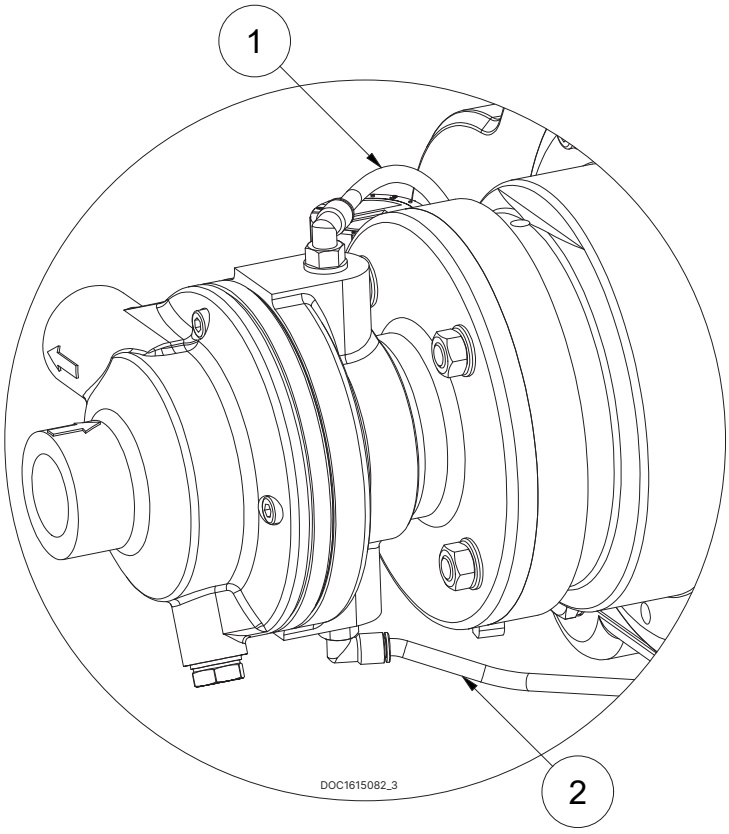

6 Troubleshooting

Problem	Cause	Effect	Corrective measure
The liquid ring pump is unable to create a vacuum	• Water control valve is closed • The pump is not receiving enough water • The temperature of the water is too high	• Reduced output • The pump can become damaged during cavitation	• Check water control valve • Check the water supply • Stop the pump and wait until the temperature has dropped to a sufficient level, or lower the temperature
The start-up power is too high	• Too much water in the pump prior to start-up	• Noise at start-up and possible overload of the power supply	• Check the stop valves in the water supply for leakage
Noise during operation	• Cavitation	• Severe damage to the pump and potential risk of breakdown	• Increase the suction pressure or lower the temperature of the water
Leakage from the bearing housing's drain holes	• Damaged shaft seal	• Bearings may become damaged • Potential risk of explosive gas leak	• Stop the pump and contact the manufacturer
The water pump has none or very poor performance/water flow	• Air in jetting water system • Water level jetting system too low	• Low or very poor water flow	• Bleed the jetting water system until there is no air left.
Leakage from the water pumps peep hole	• Connection hose Pos 2 disconnected or plugged • No water in the liquid ring pump	• Damaged mechanical shaft seal in water pump	• Replace the mechanical shaft seal in water pump

7 Spare parts and tools

7.1 Spare parts

To order spare parts, please visit the Samson Pumps Product center.

Product Center

To identify the correct Generation. Please see chapter Marking and identification

7.2 Marking and identification

The liquid ring pump is equipped with an identification plate, on the top of the shell, as shown on illustration below.
The product code configuration is to be done at Samson Pumps Product center.

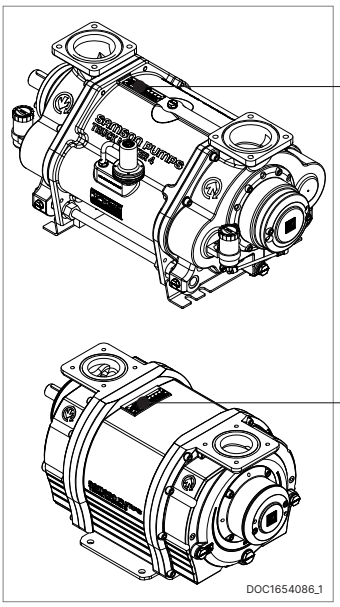

Truck Master 4 5 6
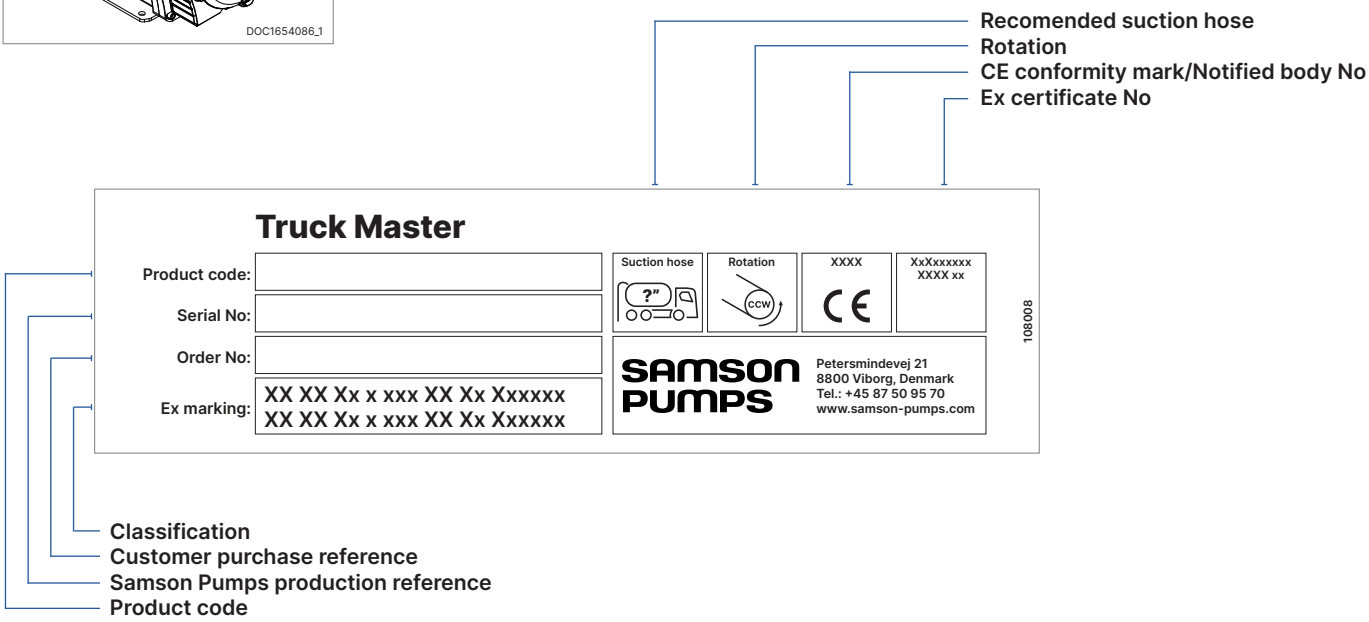
Truck Master 2 3