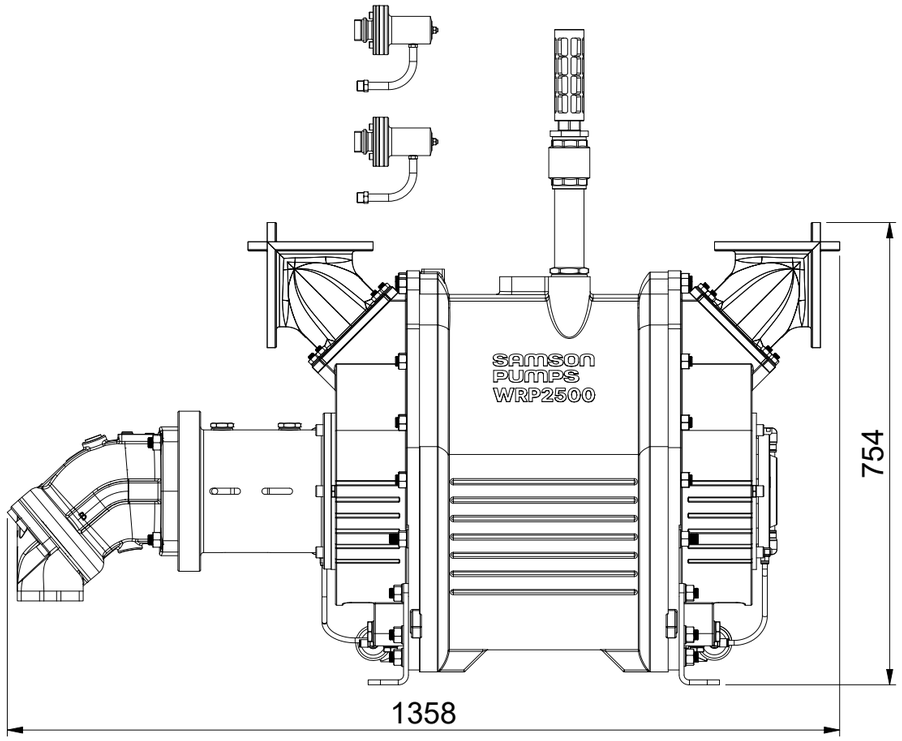

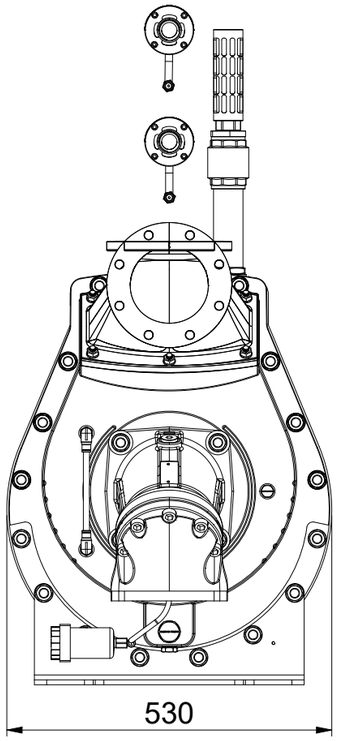

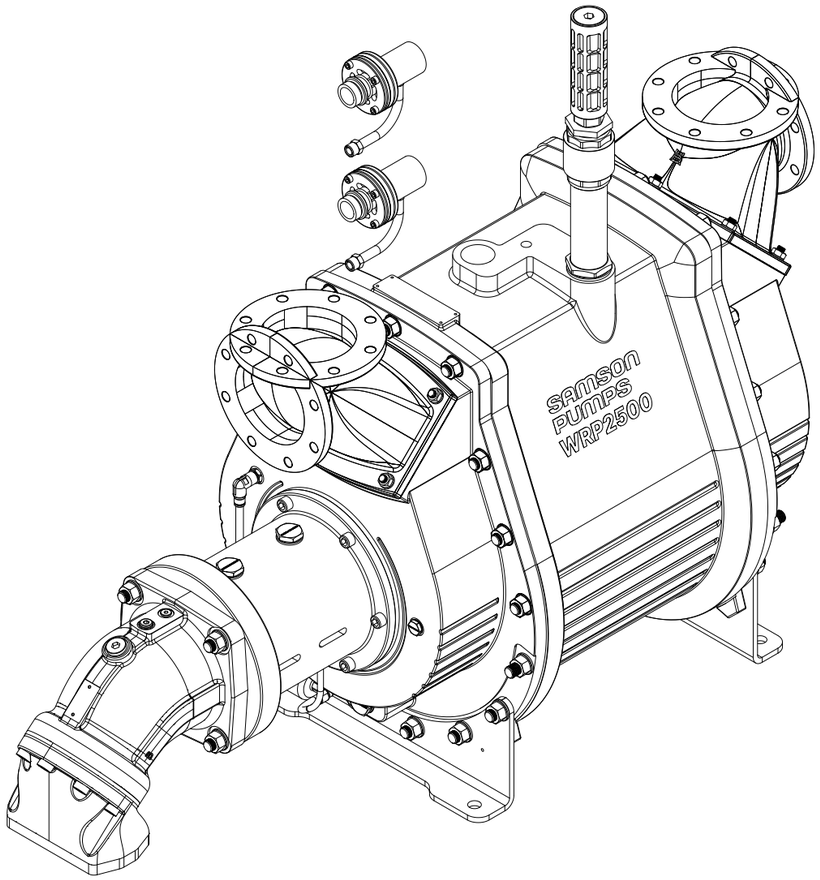

PS! All combinations are shown, remove the ones you don't have for your pump.
PS! Ex.1 and a regular model look the same from the outside.

See Diagram on Sheet 2 for selecting Connection flange.
Connection flange type A Item no: 1659017
Connection flange type B Item no: 1659039

NOTE:

	DDMMYY		
	DDMMYY		
Title: WRP2500L Hydraulic motor set for WRP2500 cm3/rev 162 ISO		Format A3 Sign 3D:JJ 2D:JJ	Date of creation 22-04-2026
		Surf. treat.	
SAMSON PUMPS		Part number 1700167	Sheet 1 of 2
			Rev.

Reproduction not permitted, may not be distributed, copied or used by third parties, without written authorization from Samson Pumps A/S. All rights reserved.

Suction in drive end			
R1 CW rotating		L1 CCW rotating	
A	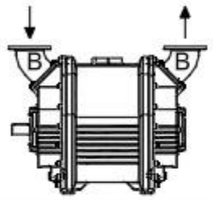	A	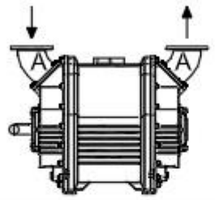
B	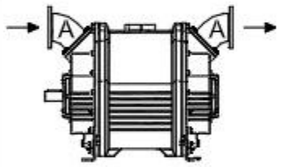	B	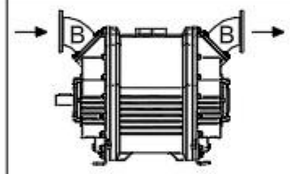
C	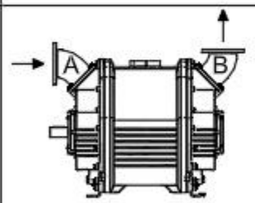	C	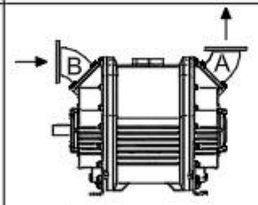
D	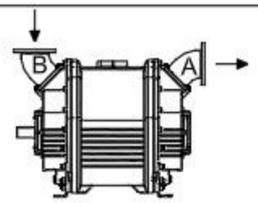	D	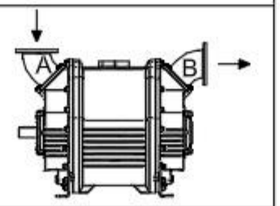

Suction in non drive end			
R2 CW rotating		L2 CCW rotating	
A	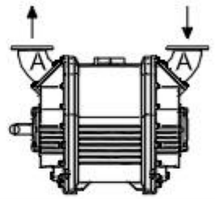	A	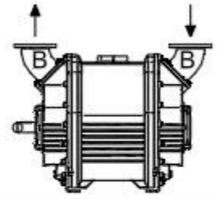
B	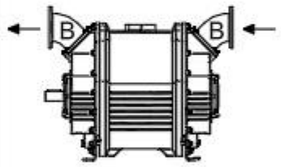	B	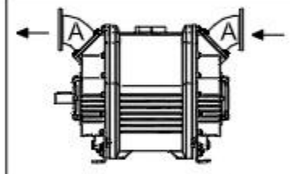
C	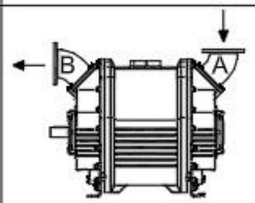	C	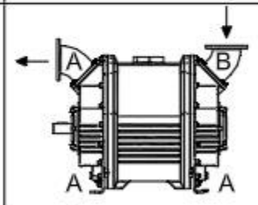
D	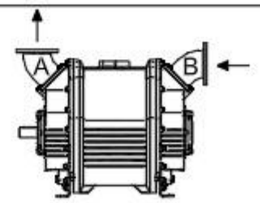	D	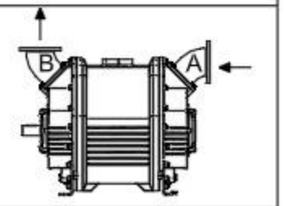

NOTE:

DDMMYY		
DDMMYY		
Title: WRP2500L Hydraulic motor set for WRP2500 cm3/rev 162 ISO	Format A3 Sign 3D:JJ 2D:JJ	Date of creation 22-04-2026
	Surf. treat.	
SAMSON PUMPS	Part number 1700167	Sheet 2 of 2
		Rev.

Reproduction not permitted, may not be distributed, copied or used by third parties, without written authorization from Samson Pumps A/S. All rights reserved.